4TH INTERNATIONAL
ROTATING
EQUIPMENT
CONFERENCE

2019 | 021

Balance between efficiency and cavitation - an approach for pump impeller design and optimization using inverse design and 3D CFD

PIF- centrifugal pumps - simulation methodology

Barbara Neuhierl, CADFEM GmbH

This paper has been presented and published on the occasion of the 4th International Rotating Equipment Conference 2019.

ABSTRACT

Energy efficiency for pumps is getting more and more important, and reduction of energy consumption is regulated by national and international law - e.g. the European "Energy Efficient Products" Policy. A substantial part of Energy consumption during operation is determined already during a product's design phase. Therefore, it is essential to focus on efficiency as early as possible in the product development process. A significant portion of losses is of course caused by the pump hydraulics. Thus, it is crucial to optimize the flow around the blades as well as the meridional shape of the impeller. In this paper, an innovative approach for design and optimization of pump impellers is presented which is based on so-called inverse design. This means that an optimal blade shape is determined by providing objective flow properties in terms of blade loading. In doing so, pump impellers with high efficiency factors can be designed very fast and by means of providing few key parameters. These are rotational speed, hub diameter, volume flow, pressure on the suction side and required pump head. Optionally, further geometry parameters like number and thickness of the blades, inlet shroud diameter, outlet midspan diameter, outlet width and axial length can be defined. Besides the maximal possible hydraulic efficiency, cavitation can also be the most relevant phenomena for a pump impeller design. Cavitation means that due to acceleration of the flow areas with low pressures can occur. If the pressure drops beneath the vapor pressure, the phase changes from liquid to gaseous, and bubbles are generated. These are transported downstream by the flow, until they reach regions with higher pressure where they collapse again. Extreme material damage, efficiency losses and unwanted acoustic effects can be the result Typically, minimum cavitation and maximal hydraulic efficiency are opposite objectives. To take this fact into account, a multi-objective optimization with two respective objectives was performed: on one hand side, the minimal pressure loss of the flow around the blades - this represents the maximal efficiency - and on the other hand side the maximal static pressure - this is correlating with the net positive suction head (NPSH) and is a criterion for cavitation. The varying input parameters were the blade loading parameters already mentioned above and a few geometry values characterizing the Meridional shape. The result is a distribution of possible impeller geometries with pareto optima. These are states where one objective cannot be further improved without changing the other for worse. Finally, the Results were simulated with highly resolved, thus reliable 3D CFD calculations for both the objective functions "maximum efficiency", and "minimal cavitation". As pumps are typically frequently also operating in off-design points, the effects of partial- or overload operating points were analyzed as well.

1 INTRODUCTION

In this paper, a workflow for the design and simulation of a pump impeller is demonstrated. It covers several steps, starting with the dimensioning of the geometry, then performing an optimization of blade and meridional shape and finally doing a full 3-dimensional numerical simulation of the impeller hydraulics. Well established and validated commercial software was used for the different steps.

2 MOTIVATION

2.1 Challenges in pump development

Nowadays, with energy consumption being regulated more and more by national and international law, the reduction of energy consumption of products is one of the most pressing goals for manufacturers of goods and facility operators alike. Among other consumer and industrial goods, pumps are explicitly mentioned e.g. in the European “Energy Efficient Products” policy and are required to fulfil strict eco requests.

As a substantial part of the energy spent during the complete life cycle of a pump is determined already during a product’s design phase, it is crucial to focus on efficiency as early as possible in the development process.

2.2 Usage of CFD in pump development

Computational Fluid Dynamics (CFD), see chapter 3 beneath, allows to simulate fluid flow through or around components and is nowadays well established in research and industry. Modern commercial simulation tools are able to represent almost all types of fluid behaviour, including physically complex phenomena like turbulence, phase transition or rotating geometry which is of course essential when looking at turbomachinery.

Nevertheless, performing computational fluid dynamics typically requires both expertise and experience. Engineers or developers need deep understanding to be able to use the methods efficiently. Experience tells that this – together with cost and effort for software tools and hardware equipment - is seen frequently as a too large hurdle for implementing simulation methods in the product development processes. There is also the possibility to use consulting, though, but this means that know-how is kept out of the company or not even built up.

2.3 Democratization: Making Numerical Simulation available for a broader number of users

The motivation to develop the workflow described in this paper below was to provide methodology which allows to support the development process for pumps also for developers who are indeed pump experts, but not necessarily simulation professionals. Applying an automated, validated workflow allows to keep the focus on the daily work and at the same time benefit from the possibilities that modern simulation methods can offer.

3 NUMERICAL METHODS

3.1 Computational Fluid Dynamics (CFD)

The term “Computational Fluid Dynamics” (short: CFD) in general describes methods for the numerical simulation of flow problems. The most common and widely used approach is based on the Finite Volume Method.

Fluid flow can be represented by a set of partial differential equations, the so-called Navier-Stokes equations. These describe momentum, mass and heat transfer, are able to cover a very broad range of flow problems and can be discretized both in time and space. In doing so, the fluid domain of interest is divided up into small control volumes. Mass, momentum and heat balances are formulated for each of them, generating a system of equations that can then be solved iteratively, resulting in a full picture of the fluid flow behaviour. For background information on computational fluid dynamics, please refer to literature like e.g. [1], [2].

Further physical effects like e.g. combustion or cavitation can be also be solved in combination with the discretized Navier-Stokes equations. Typically, these phenomena are approximated by appropriate models. The most prominent example is turbulence which plays a crucial role in almost every technically relevant fluid flow. Treating turbulence in an appropriate manner is a basic prerequisite to achieve reliable results. Thus, turbulence modeling is an essential and central topic in CFD and subject to intensive research, permanent development and continuous further development. Details about turbulence models for CFD are given e.g. in [3], [4].

3.2 Inverse Design for Turbomachinery

Modern CFD is able to represent the complex flow in e.g. a pump, allowing to evaluate a design without having to build a physical prototype to be tested on a testbench. But this requires the pump stage geometry to be designed first. In general,

the first step in developing turbomachinery – regardless wether it is fans, compressors, turbines or pumps - is the design phase where rotor and stator blade shapes as well as housing dimensions are created. Common approaches for designing are described e.g. in [5], [6]. The usual procedure is to start with a design, analyze the flow field, then adapt the design gradually in order to improve it. Typically, this design iteration loop needs to be repeated multiple times. A special challenge is the fact that it can be difficult to analyze the flow situation properly to be able to derive useful modifications. This is due to the complex nature of the flow and the frequently observed phenomenon that a rather small modification of e.g. blade shape can affect the complete flow field significantly, making the prediction of the impact on e.g. efficiency or head difficult.

To overcome this issue, often numerical optimization tools are used, which require the geometry description to be parametrized in an appropriate way. This typically requires a large number of parameters, in consequence leading to a large number of variants to be examined.

The approach used for pump design in the work described in this paper is basically different and goes the other way around: So-called “inverse design” was used. “Inverse Design” means that an optimal blade shape is determined by providing objective flow properties. This is done here in terms of pressure distribution on the blades, the so-called blade loading. From experience, it is well known what the blade loading looks like for blades of an impeller that shows high efficiency or alternatively of blades where no cavitation occurs.

The pressure distribution on the blades is used as a start point, and the geometry is defined to meet this goal via an iterative process. More details are given in [7].
Considering optimization, the inverse design approach has the advantage of being able to actually describe geometry in terms of blade loading. This means that only very few parameters are needed to formulate an optimization task, as shown in chapter 3.3 below. Figure 1 shows an example of the streamwise definition of a typical blade loading.

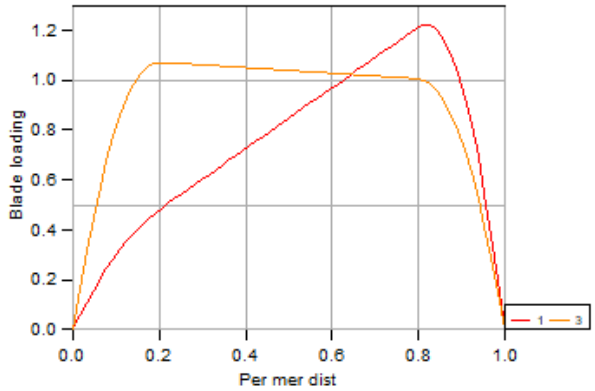

Figure 1. Blade loading used as the starting point for blade design.

3.3 Multi-objective Optimization

For the approach presented in this paper, two different objectives were considered. On one hand side this was the hydraulic efficiency of the pump impeller, which can be determined from the numerical results. This objective is represented by the pressure losses caused by the flow through the impeller. On the other hand, the maximum pressure was considered. This represents net positive suction head, which is a measure for cavitation of a pump. The pressure in a pump needs to stay above the vapor pressure to avoid phase change (see also chapters 5.3 and 7.1 below).

In general, optimization requires to take into account all theoretically relevant configurations of a system. As in reality this is hardly possible, a Multi-Objective-Genetic-Algorithm (MOGA) was used. It allows to examine the trade-off between two parameters, here efficiency and NPSH. A typical result is a so-called “pareto frontier” which describes variants where one objective cannot be improved without degrading the other.

4 SOFTWARE PROGRAMS USED

Both for the design as well as for the numerical validation of the results, commercially available software was chosen.

On the CFD side, ANSYS CFX was used, while for the inverse Design approach and optimization, Turbo Design Suite from Advanced Design Technology was applied.

5 WORKFLOW FOR PUMP DESIGN AND SIMULATION

5.1 Workflow steps

The workflow designed for the goal of pump impeller design, optimization and computational validation basically consists of 4 main steps, which are shown in Figure 2:

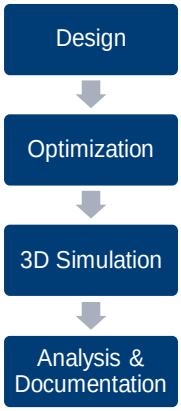

Figure 2. Workflow for generating radial pump impellers with high efficiency.

5.2 Initial Design

The design part was performed using the inverse design approach described above. The result is the blade shape as well as the meridional shape of the impeller.

Necessary input parameters for the workflow are first of all the pump duty data, consisting of:

- Volume Flow
- Rotational Speed
- Pump Head
- Hub Diameter
- Total Pressure at Inlet (Suction Side)

Furthermore, the properties of the Fluid must be provided. This would be

- Fluid Density
- Fluid Viscosity
- Vapor Pressure.

Optionally, the main geometry dimensions can be defined. This can e.g. be helpful for a case where a new pump impeller is planned to be mounted in an existing pump. The respective parameters are:

- Inlet Shroud Diameter
- Outlet Midspan Diameter
- Outlet Width
- Axial Length
- Trailing Edge Blade Thickness
- Number of Blades

If these dimensions are not fixed, they will be determined by the design process and thus be part of the result. It should be noted at that point that restricting the design space in such a manner might lead to impellers with less efficiency.

5.3 Optimization: Cavitation versus efficiency

After that comes an optimization run. Here, it can be decided which is the main objective, either maximum efficiency or minimal cavitation. Typically, minimum cavitation and maximal hydraulic efficiency are opposite objectives. To take this fact into account, a multi-objective optimization with two respective objectives was performed: on one hand side, the minimal pressure loss of the flow around the blades – this represents the maximal efficiency - and on the other hand side the maximal static pressure – this is correlating with the net positive suction head (NPSH) and is a criterion for cavitation. Basically, the chosen objective would depend on the application the pump is intended for:

- Hydraulic efficiency: This is especially relevant for pumps which run constantly for a long time.
- Cavitation can also be the most relevant phenomena for a pump impeller design. Cavitation means that due to acceleration of the flow areas with low pressures can occur. If the pressure drops beneath the vapor pressure, the phase changes from liquid to gaseous, and bubbles are generated. These are transported downstream by the flow, until they reach regions with higher pressure where they collapse again. Extreme material damage, efficiency losses and unwanted acoustic effects can be the result. The physics of cavitation has been documented in detail e.g. in [1], [10]. For some cases – e.g. fire pumps - cavitation needs to be avoided at any cost. For other cases, if e.g. the impeller is made from cavitation-proof material, cavitation

that occurs only locally can be tolerated to a certain extent.

5.4 3D simulation

The 3D simulation performed took advantage of the symmetry of the impeller. Thus, only one segment was modeled, and periodic boundary conditions applied. When looking at the impeller only, this is an acceptable simplification. Figure 3 shows a typical segment simulation model.

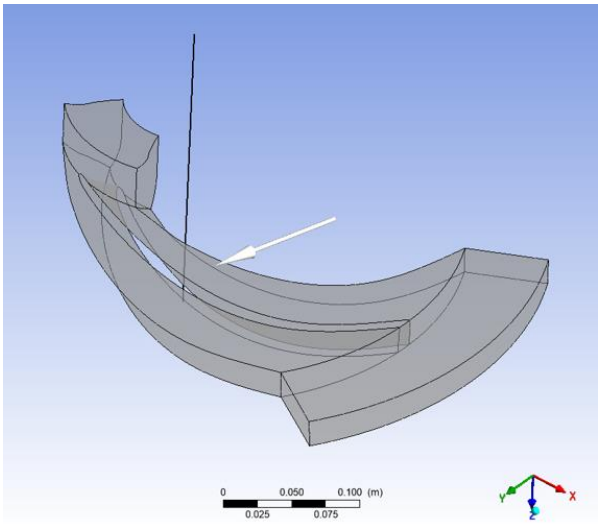

Figure 3. Partition simulation model with periodic boundary conditions

6 IMPELLER EXAMPLE

6.1 Required pump duty data

To give detailed insight into the workflow described above, it is demonstrated using the example of a pump impeller with the following data:

Table 1. Input data for the pump impeller design

Pump Duty Data	
Volume Flow	6000 [l/min]
Rotational Speed	1450 [rpm]
Pump Head	50 [m]
Hub Diameter	100 [mm]
Total Pressure at Inlet	101325 [Pa]
Fluid Properties	
Viscosity	0.001003[Pa*s]
Density	998 [kg/m^3]
Vapor pressure	1900 [Pa]

The geometrical design space should not be limited, so there were no main dimensions of the impeller defined.

6.2 Optimization goals

In the example demonstrated here, maximal hydraulic efficiency was supposed to be the main objective.

Figure 4 shows the result of the optimization run: a large number (2400) of configurations was evaluated, and the designs are represented in the diagram as green dots. The red dots to the right form the pareto frontier: Here we can find the optima. The asterisk at the left lower end of the pareto frontier represents the case where maximal efficiency – that means minimal pressure loss – is achieved. The asterisk on the upper right side in contrast marks the configuration where minimal cavitation occurs.

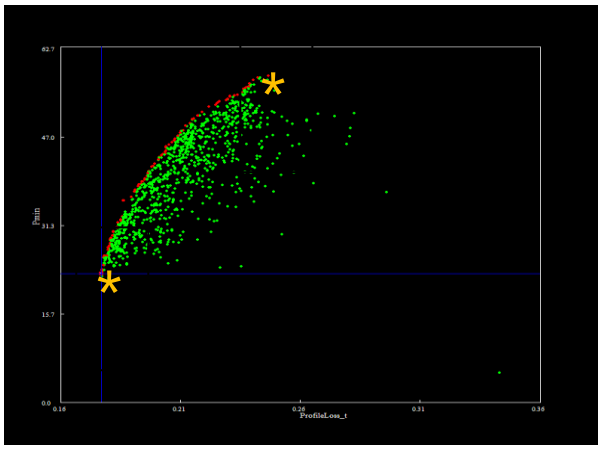

Figure 4. Optimization results, abscissae: Profile Loss (representing the hydraulic efficiency), ordinate: minimal pressure, representing NPSH

6.3 Results

A CFD simulation was performed for the case with maximum efficiency.

The simulation showed that the impeller efficiency was above 94%. It must be emphasized here that this value represents the hydraulic efficiency of the idealized impeller only. A volute would also contribute to the overall pressure losses, as well as other geometrical properties (like e.g. tip gap, cavities or of course housing or volutes). These details may not be neglected and need to be considered subsequently. Nevertheless, the simplifications made are reasonable in order to do a first quick assessment.

The main impeller dimensions resulting from the workflow are listed in Table 2.

Table 2. Resulting main dimensions for the pump impeller

Pump Main Dimensions	
Inlet Shroud Diameter	195.5 [mm]
Outlet Midspan Diameter	413.6 [mm]
Outlet Width	22.5 [mm]
Axial Length	78.7 [mm]
Number of Blades	7
Trailing Edge Blade Thickness	8.3 [mm]

An impression of the resulting geometry is given beneath: Figure 5 shows an isometric view of the pump impeller, including the hub. The shroud geometry is not shown here, but it was also included in the simulation.

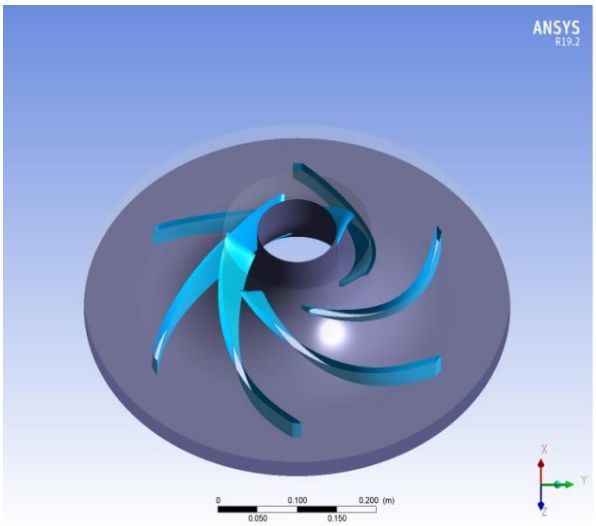

Figure 5. Isometric view of pump impeller geometry

The cross section of the meridional shape, with the blade position indicated, is shown in Figure 6:

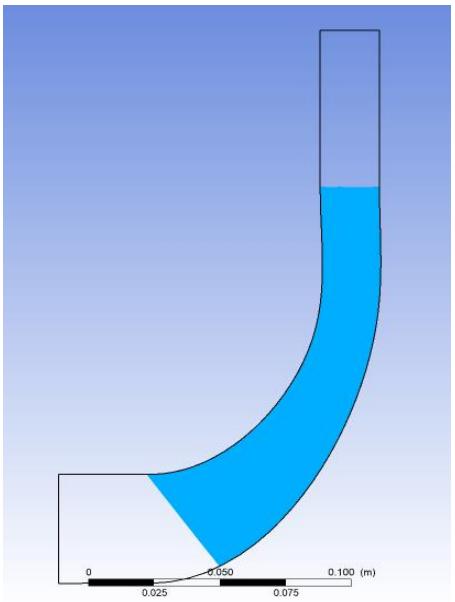

Figure 6. Sketch of Meridional Shape

Due to the inverse design approach, geometry can indeed be seen as part of the result instead of the starting point of the development.

The simulation result also allows to look into various types of results. Exemplarily, the blade load distribution at mid-span is shown in Figure 7.

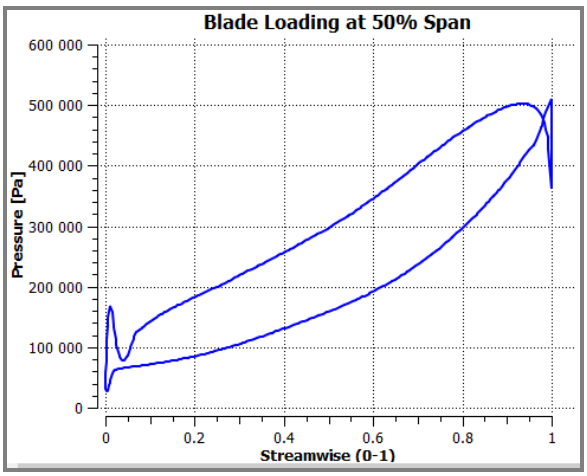

Figure 7. Blade loading at 50% Span both at pressure and suction side of the blade.

Another typical type of result is velocity vector plots (Figure 8) or Pressure distributions like the streamwise plots of total and static pressure shown in Figure 9.

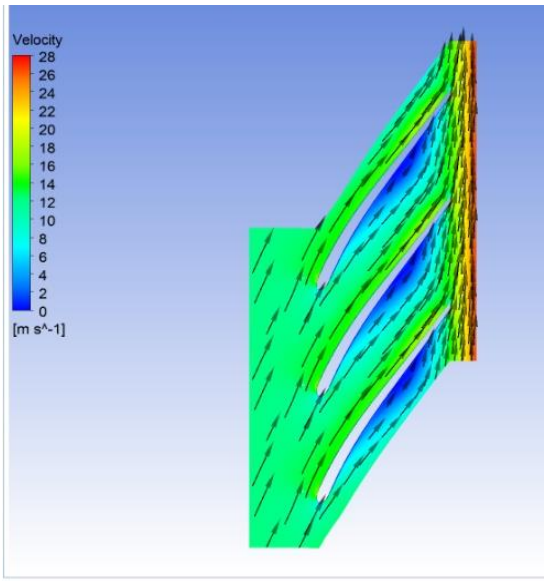

Figure 8. Velocity vectors around blades

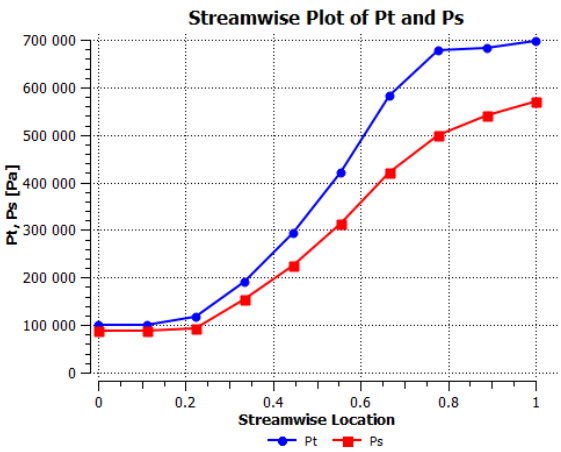

Figure 9. Velocity vectors around blades

In reality, Pumps are frequently operated outside the design working point. It can thus be interesting to know about the behaviour of the machine in so-called off-design points. Numerical simulation allows to investigate this easily.

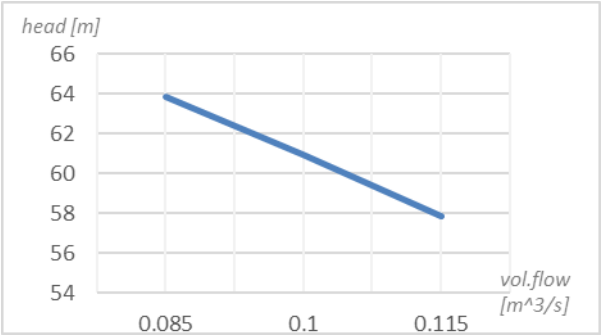

Figure 10. Pump head both for main design operating point as well as for off-design points (+/- 15% above resp. beneath the design point)

Typically, volume flows that are 10%, 15% or 20% above and beneath the design point are examined in addition.

7 CONCLUSIONS AND OUTLOOK

7.1 Effect of Cavitation

It was mentioned above that the workflow presented in this paper allows to choose between the goals “maximal efficiency” and “minimal cavitation”, which is then taken into account within an optimization run.

Figures 11 and 12 demonstrate the different results of the two different cases: The magenta-colored surfaces in the respective pictures represent isosurfaces of the vapor pressure and show the areas where cavitation is likely to occur. These areas are remarkably smaller in case 2 (Figure 12), meaning danger of cavitation is much smaller than in case 1 (Figure 11) where maximum efficiency was chosen as the objective.

Figure 11. Case1: Isosurface of vapor pressure.

Figure 12. Case 2: Isosurface of vapor pressure, objective “minimal cavitation”

As already mentioned above (chapter 5.3), cavitation, which is an extremely complex, transient process, can be a major issue for pumps.

The understanding of the physics and underlying phenomena is crucial in order to be able to deal with the cavitation effects in a numeric simulation.

Cavitation typically occurs when e.g. rapid changes of cross section or fast-moving objects like turbine or pump blades accelerate the flow, thus, according to Bernoulli’s law, leading to a decrease of the static pressure. With the pressure dropping beneath the vapor pressure, the phase changes from liquid to gaseous, and cavitation areas are developing. After being transported downstream by the flow, they can collapse again when reaching regions with higher pressure.

The growth of bubbles due to pressure decrease is linked to the existence of small nuclei of vapor in the flow (see e.g. [10], [11], [12]). These are constantly distributed in the flow regime and start to grow once the pressure falls beneath the vapor pressure. The bubble growth effect can be described by the Rayleigh–Plesset equation, which governs the dynamics of a spherical bubble in an infinite body of incompressible fluid (see e.g. [10]). This is typically the basis for modeling cavitation in computational fluid dynamics, like described in e.g. [11], [12], [13]. The flow is then represented as a so-called multi-phase simulation where two aggregate conditions and their interaction are represented, with the vapor fraction being a result of the bubble growth due to the pressure conditions.

It must be emphasized here that no cavitation model was applied in the simulations performed in the context of the discussed workflow documented in this paper. In order to predict NPSH (“net positive Suction Head”) of a pump correctly, it would be necessary to represent the phase change due to pressure drop in an appropriate manner, like using a cavitation model in the simulation. The simulation method used for the described workflow allows a cavitation model to be activated. This is a recommended further step for pumps where cavitation is expected to play a significant role.

7.2 Housing / Pump Volute

The pump impeller is typically mounted inside a volute. A typical shape is shown in figure 13.

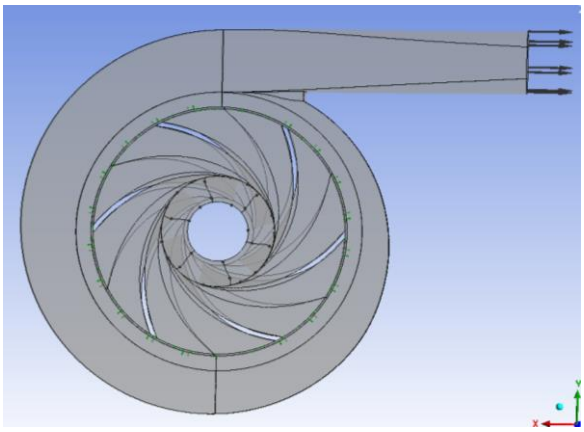

Figure 13. Spiral case (volute) fitting to the demo example pump impeller.

The volute can be easily be added in a simulation model together with the impeller. Both transient and stationary simulations can be performed. There are different possibilities to represent the interface between the rotating and stationary simulation domains. Figure 14 beneath shows a result plot with velocity streamlines, colored by static pressure, for the impeller and volute domains.

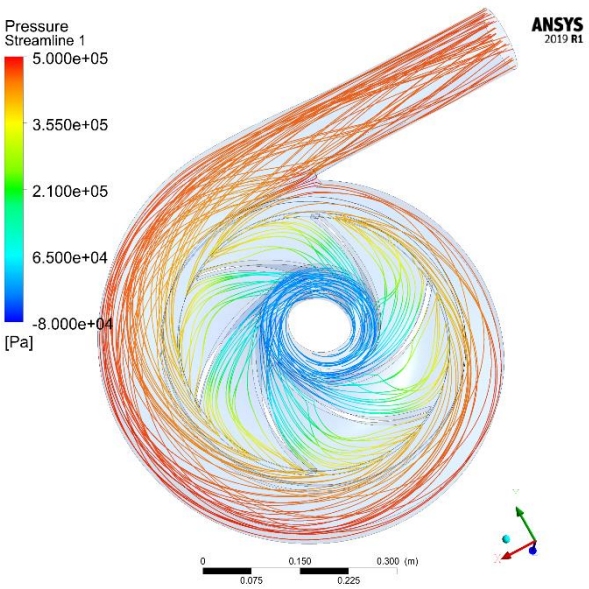

Figure 14. Simulation results: Flow streamlines through impeller blades and volute

The evaluation of the simulation results also predicts an impeller efficiency for the pump hydraulics shown here – impeller and volute – of 91% (compared to 94% of the impeller hydraulics only, chapter 6.3).

7.3 Geometry details

Further geometry details like tip gaps, relief wells, cavities etc. can be included in further steps and examined with detailed CFD simulations, allowing deeper insight in their impact on the pump behaviour.

8 SUMMARY

By performing the steps described in this paper, the pump hydraulics can be developed from scratch, based solely on the pumps' required duty data.

Not only are impeller and volute designed, but the machine is also simulated with highly reliable 3D CFD, using commercially available software that has been validated numerous times. In addition, an optimization run is performed which allows to focus either on maximizing the efficiency or on minimizing cavitation.

Following the described workflow enables users to use modern, established simulation methods in order to shorten production times and make their products more performant and reliable. The CFD model applied can be extended further in order to include more complex effects like gap flows or cavitation.

9 ACKNOWLEDGEMENTS

The author would especially like to thank M. Zangeneh and L. Bossi from Advanced Design Technology for the collaboration and support.

10 REFERENCES AND BIBLIOGRAPHY

[1] Johnson, R.W. (Editor), *Handbook of Fluid Dynamics*, CRC Press, 2016

[2] Wilcox, D.C., *Basic Fluid Dynamics*, DCW industries, 2006

[3] Menter F., Egorov Y., *Turbulence Modeling of Aerodynamic Flows,* International Aerospace CFD Conference, Paris 2007

[4] Wilcox, D.C., *Turbulence Modeling for CFD*, DCW industries, 2004

[5] Gülich, J.F., *Kreiselpumpen: Handbuch für Entwicklung, Anlagenplanung und Betrieb,* Springer, 2014

[6] Pfleiderer, C., *Die Kreiselpumpen für Flüssigkeiten und Gase: Wasserpumpen, Ventilatoren, Turbogebläse (German Edition),* Springer, 2012

[7] Zangeneh, M. and Hawthrone, W.R., *A Fully Compressible Three Dimensional Inverse Design Method Applicable to Radial and Mixed Flow Turbomachines,* ASME 90-GT-198

[8] Brusiani, F., Mianchi, G.M., Costa, M., Squarcini, R., and Gesperinie, M., *Evaluation of Air/Cavitation Interaction Inside a Vane Pump,* 4th European Automotive Simulation Conference, Munich 2009

[9] ANSYS Inc., *ANSYS Fluent Theory Manual,* Version 2019R2, 2019

[10] Brennen, C.E., *Cavitation and Bubble Dynamics*, Cambridge University Press, 2013

[11] Schnerr, G. H. and J. Sauer, J., *Physical and Numerical Modeling of Unsteady Cavitation Dynamics*, Fourth International Conference on Multiphase Flow, New Orleans, USA, 2001

[12] Singhal, A. K., Li, H. Y., Athavale, M. M., and Y. Jiang,Y., *Mathematical Basis and Validation of the Full Cavitation Model,* ASME FEDSM'01, New Orleans, Louisiana 2001.

[13] Zwart, P. J., Gerber, A. G., and Belamri, T., *A Two-Phase Flow Model for Predicting Cavitation Dynamics,* Fifth International Conference on Multiphase Flow, Yokohama, Japan, 2004