CADFEM®

Simulation is more than Software®

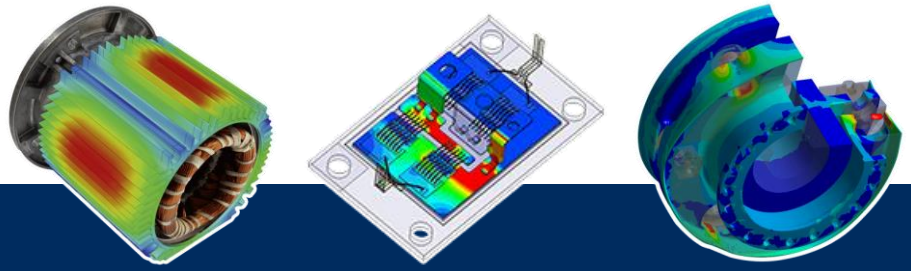

Simulationsgestützte Entwicklung

Leistungselektronischer Schaltungslayouts

Auswirkungen parasitärer RLC auf das Schaltverhalten verstehen und optimieren

Power Electronics as Enabler for an Energy Efficient World

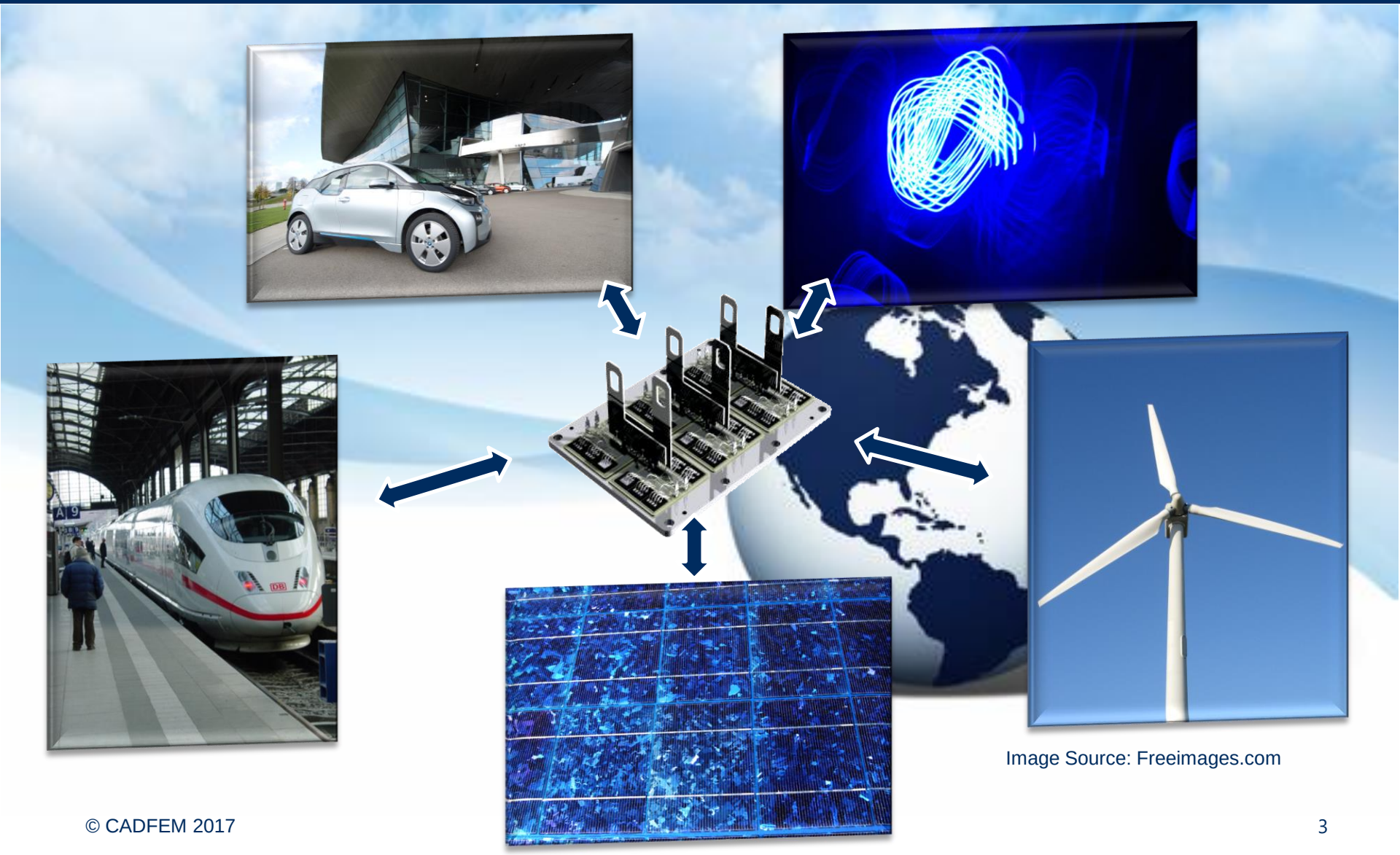

Image Source: Freeimages.com

New Challenges in Hardware Development for Power Electronics

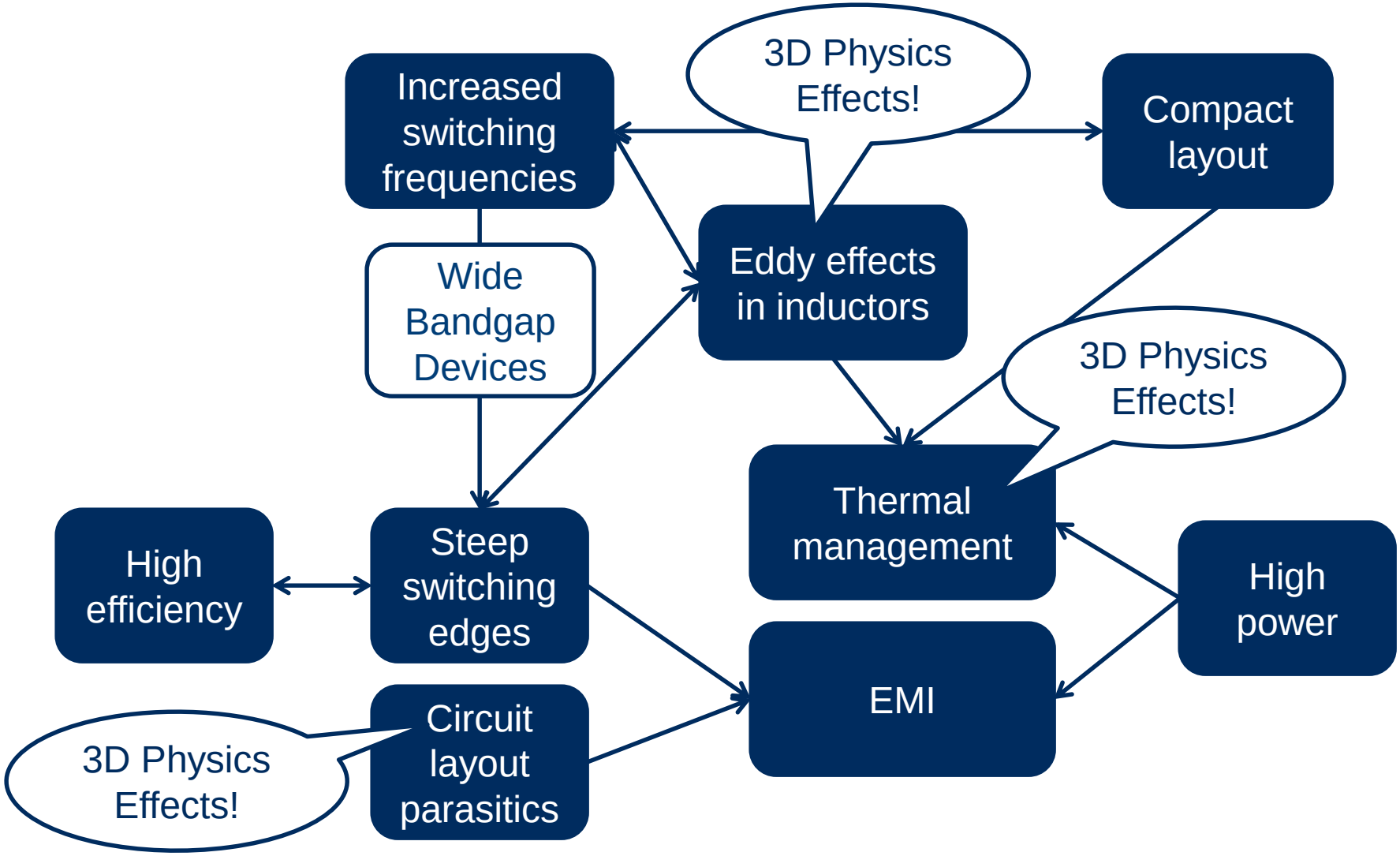

Hardware Development for Power Electronics

- Typical applications:
  - Inverters
  - DC-DC
  - Inductors, chokes, transformers

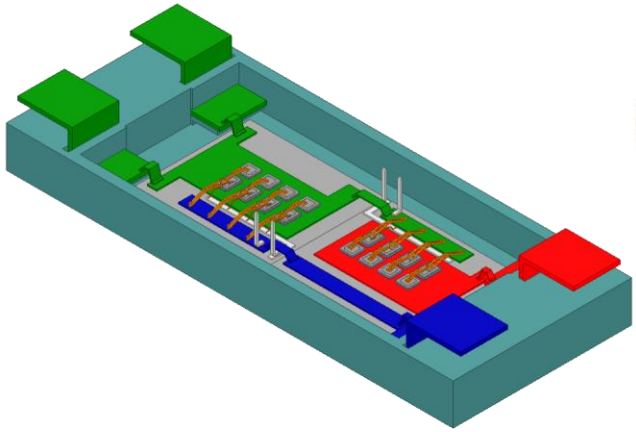

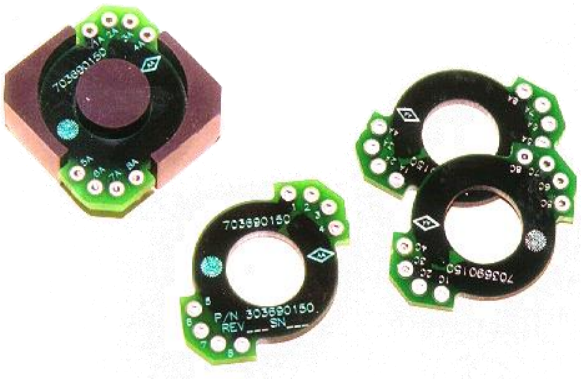

- Typical questions:
  - Designed inductances and coupling factors
  - Efficiency
  - Parasitic inductances of connection to bus capacitors or parallel IGBTs
  - Switching behavior and EMI
  - Current load capacity
  - Thermal management

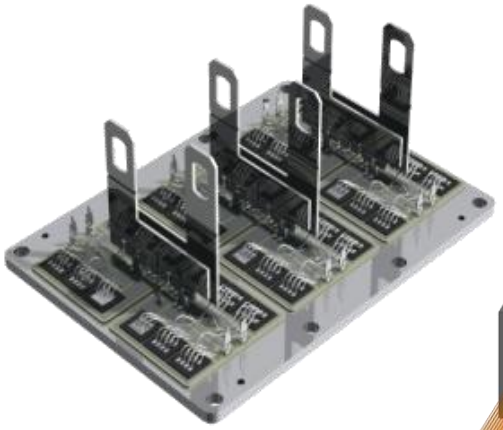

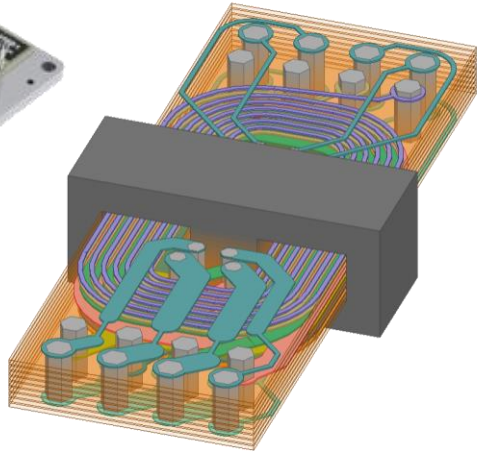

Image source: ANSYS, CADFEM

Layout Parasitics

- Dimensional analysis:
  - μ_0=1nH/mm
  - Can estimate inductances from geometry, but better/easier with field simulation
  - Inductances and resistances are frequency dependent

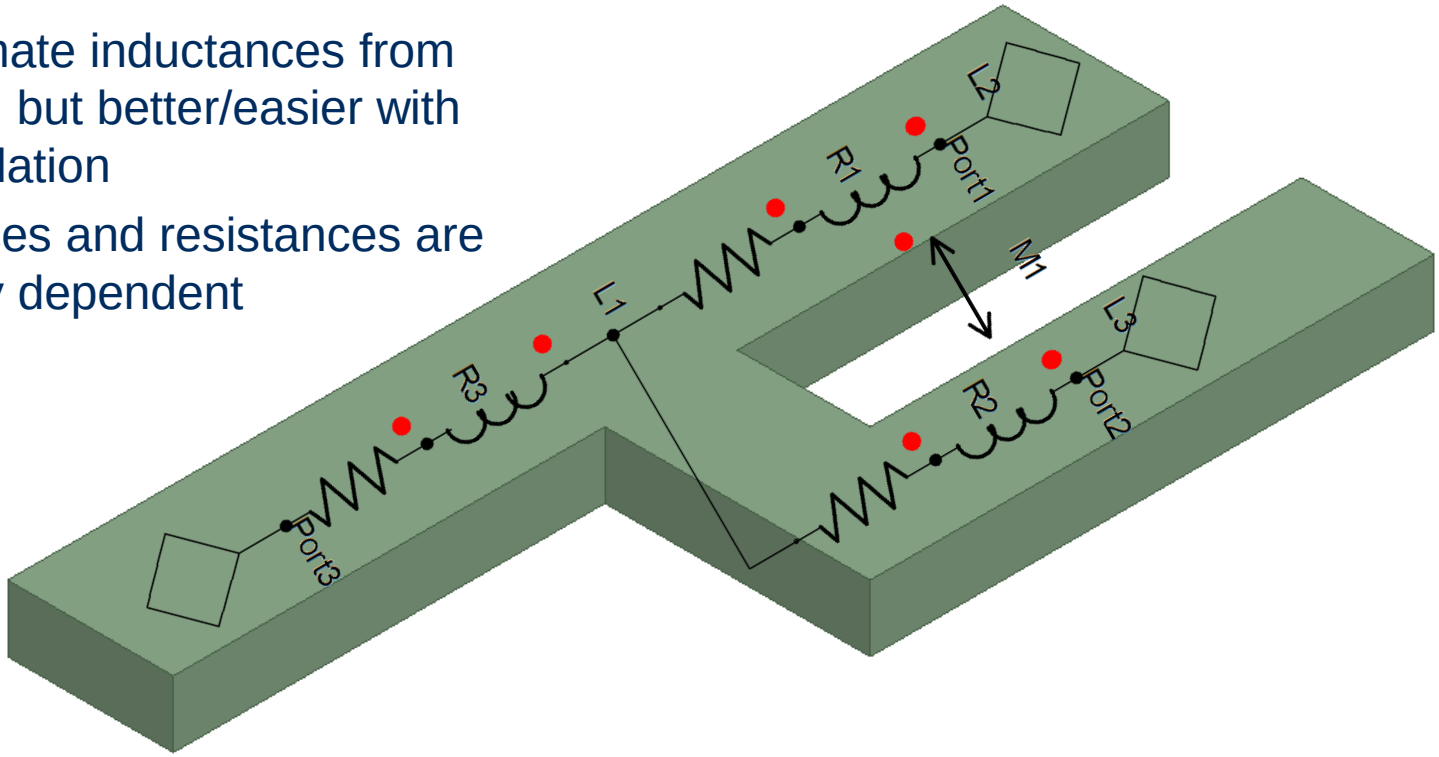

Frequency Dependant Effects

- Skin effect
- Proximity Effect

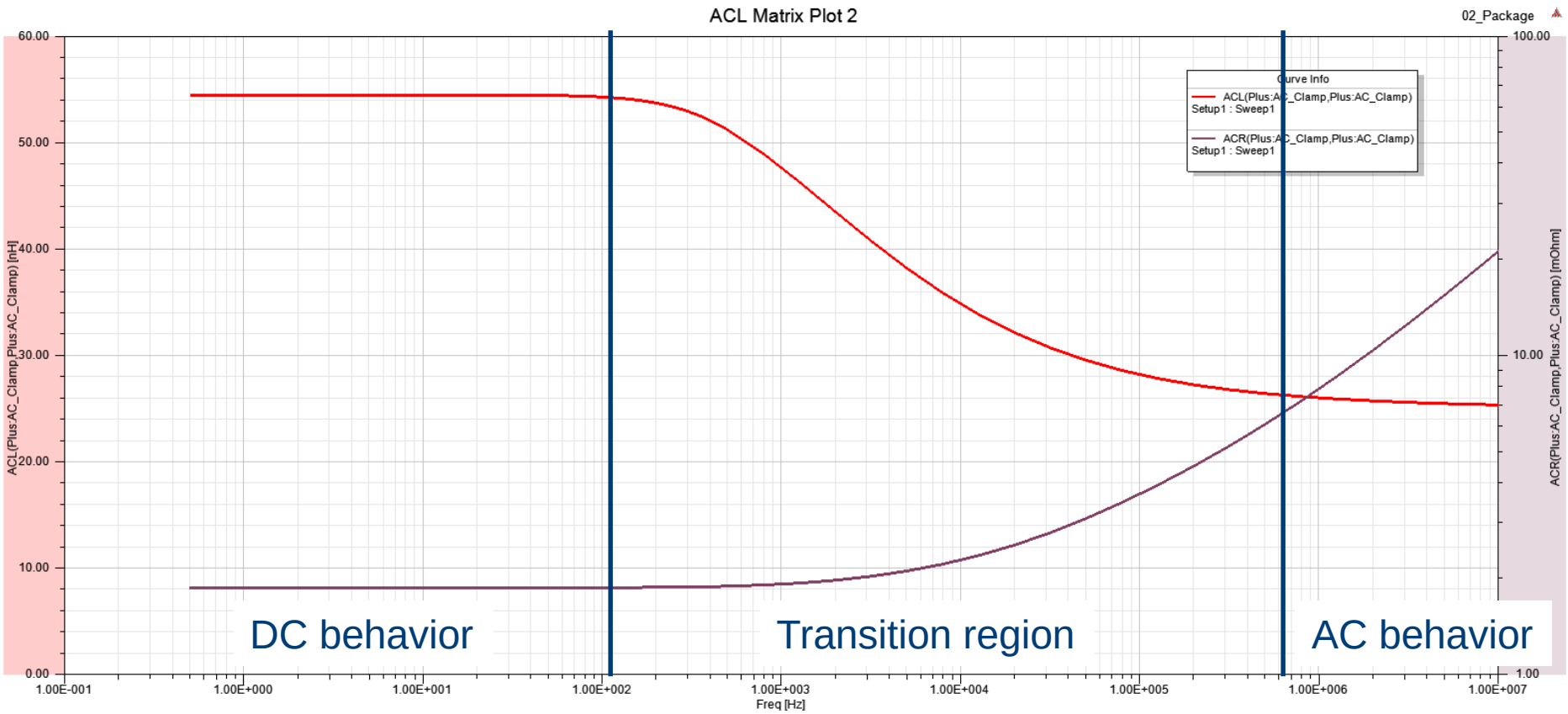

Layout Parasitics

- Dimensional analysis:
  - ε_0=9pF/m
  - Can estimate capacitances from geometry, but better/easier with field simulation

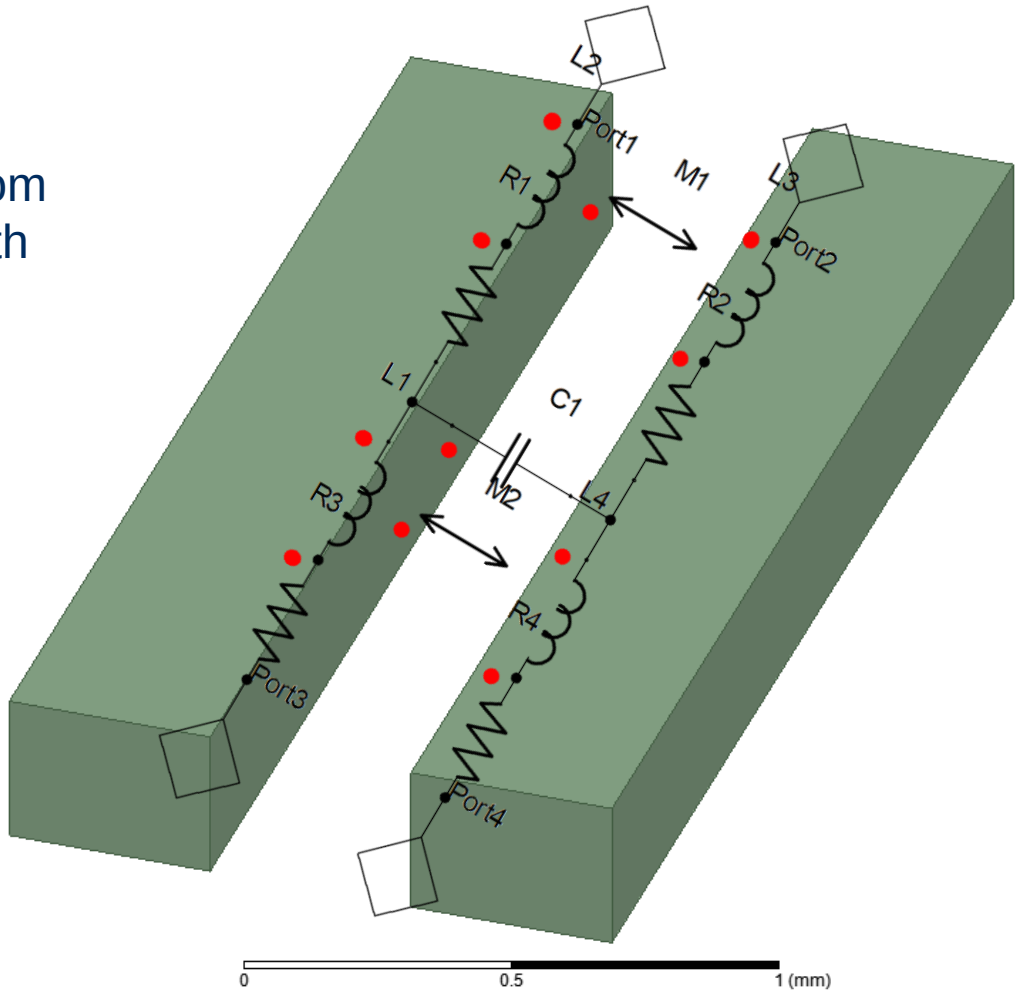

Impact of Parasitic Inductances of the Layout

Parasitic inductances of connection to bus capacitors or parallel IGBTs move resonance to lower frequencies!

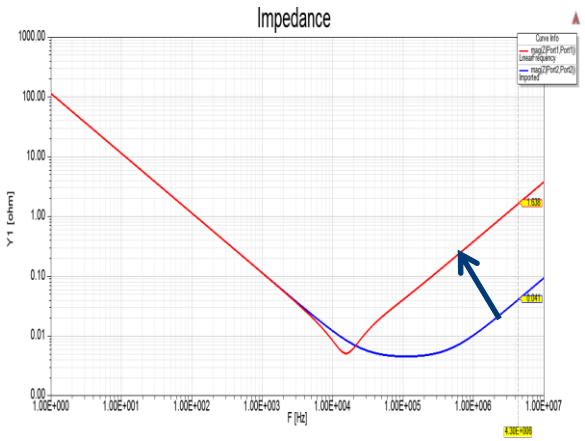

Uneven current distribution during switching in parallel circuits

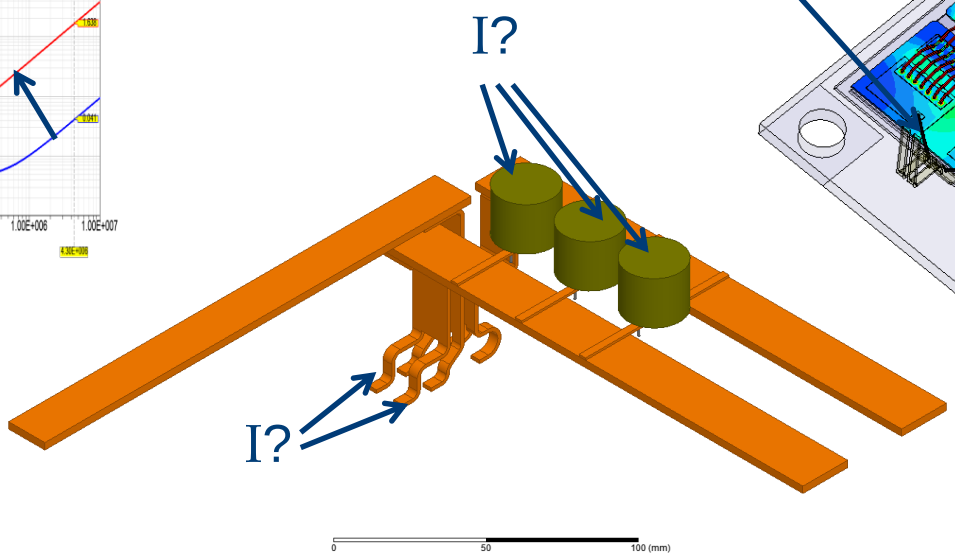

Inductive feedback of load currents to gate drive

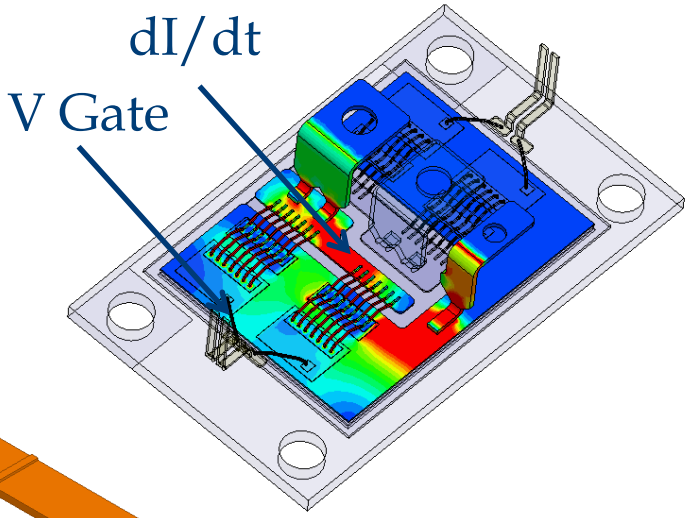

Simulationsgestützte Entwicklung

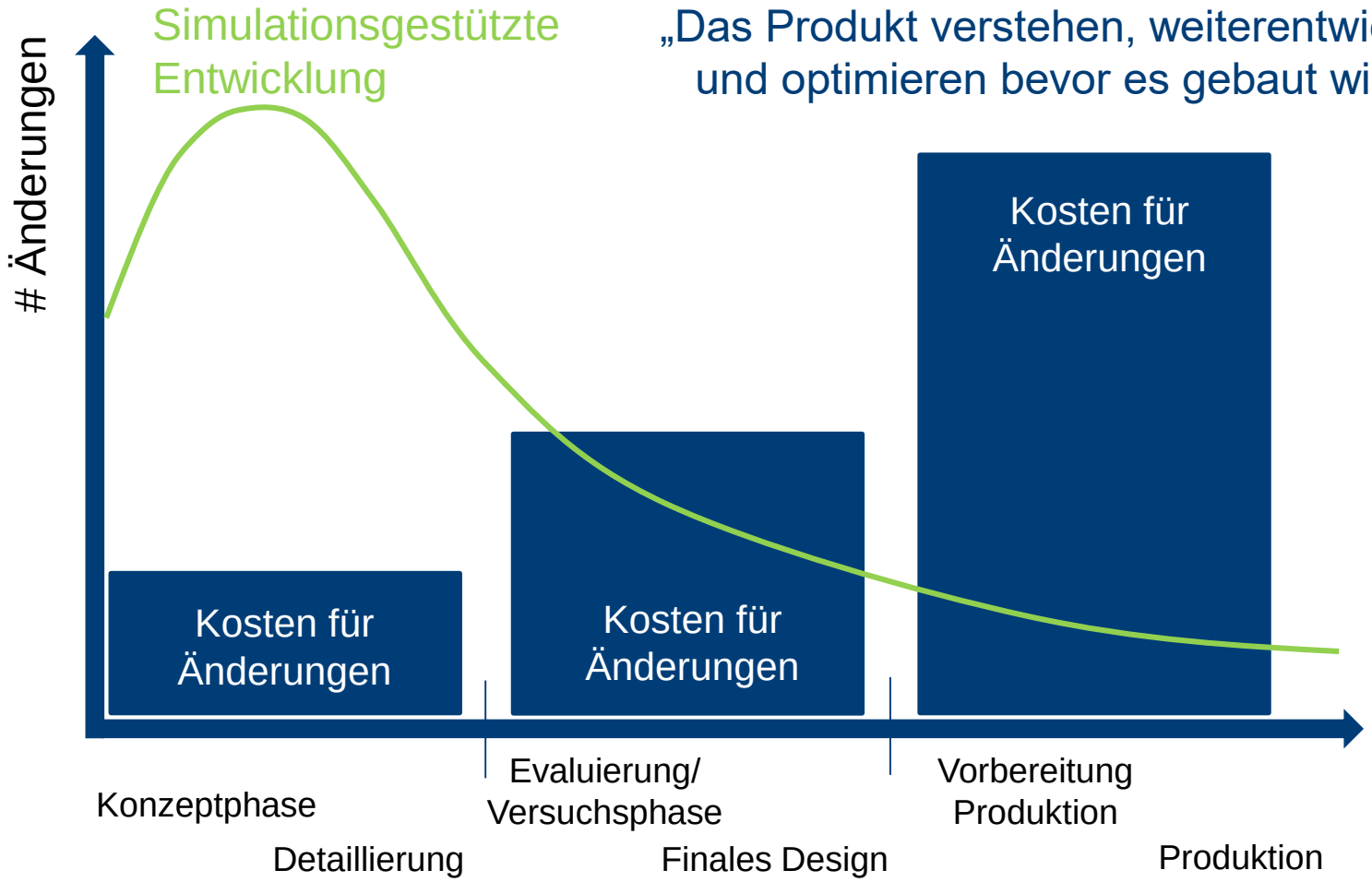

„Das Produkt verstehen, weiterentwickeln und optimieren bevor es gebaut wird.“

Extraction of Parasitic RLC

- Fast and easy extraction for
  - Bus bars
  - Powermodules
  - Packages
  - PCBs
  - Cables
  - Connectors

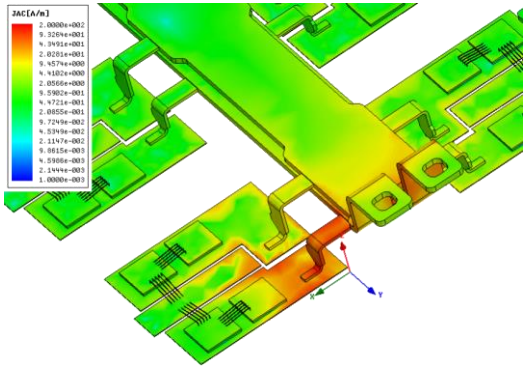

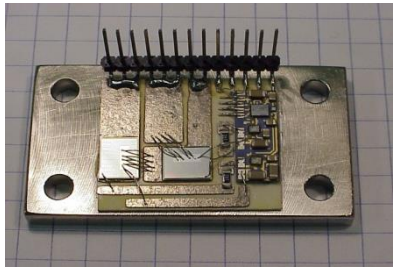

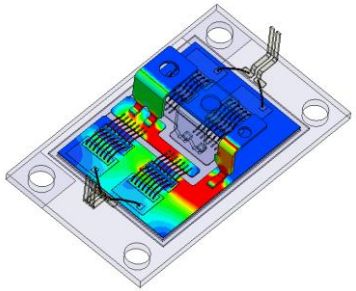

- Different scales!

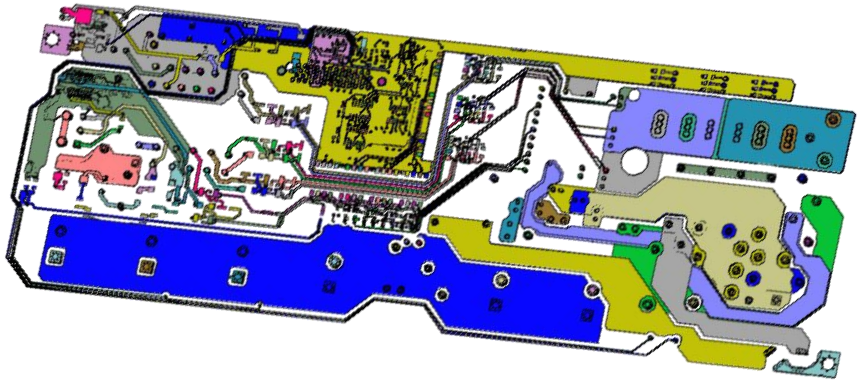

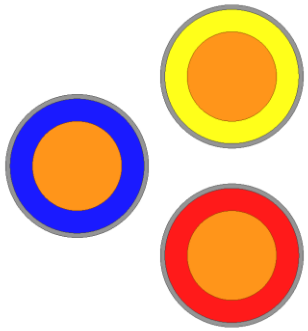

Image source: ANSYS, CADFEM

Export of SPICE Models

Formats:

PSPICE, HSPICE, Spectre, Nexxim, Simplorer, Touchstone

Fast insight into circuit design taking into account layout parasitics

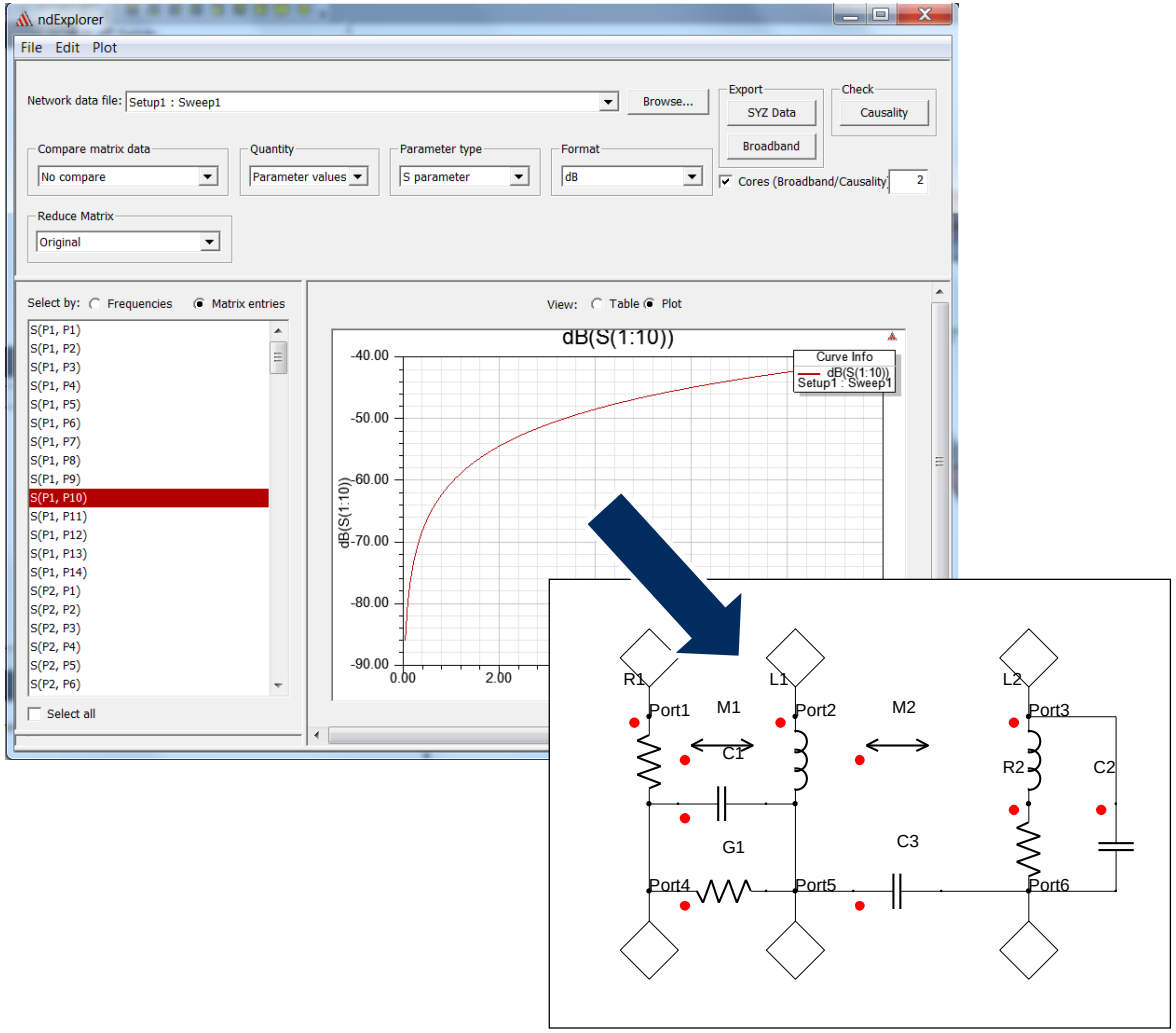

CADFEM®

Simulation is more than Software®

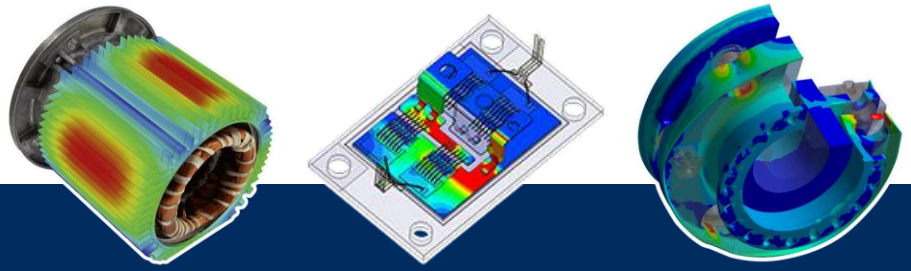

Impact of Parasitics on the Performance of Inverters

High Side Test

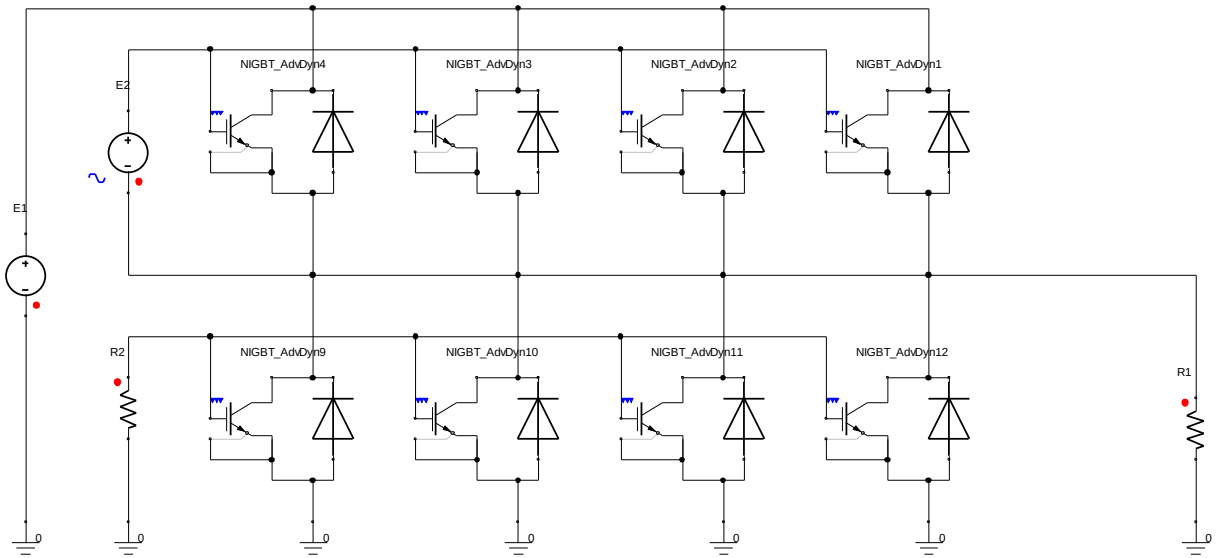

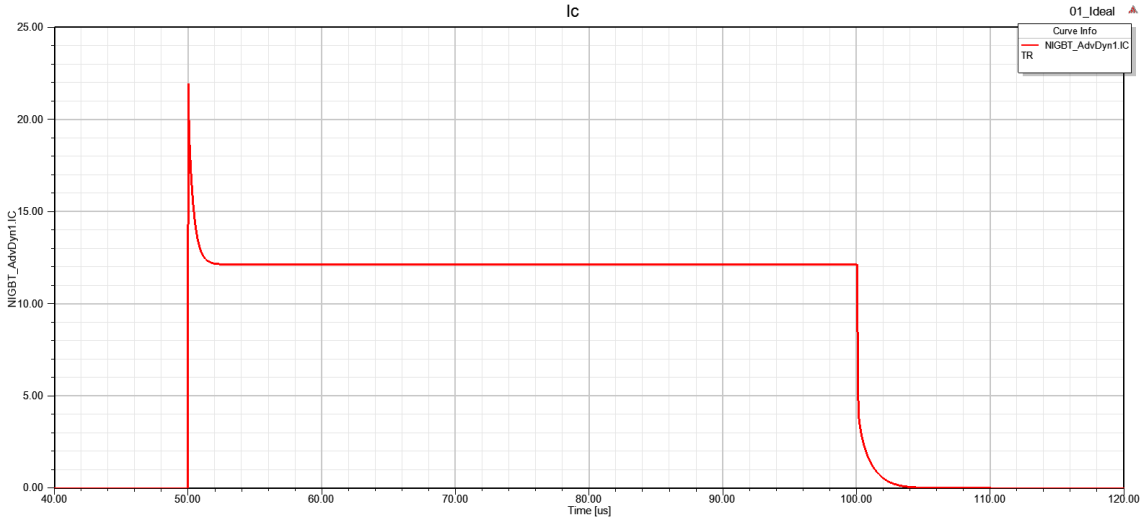

Impact of Parasitics on the Performance of Inverters

- Half-bridge module

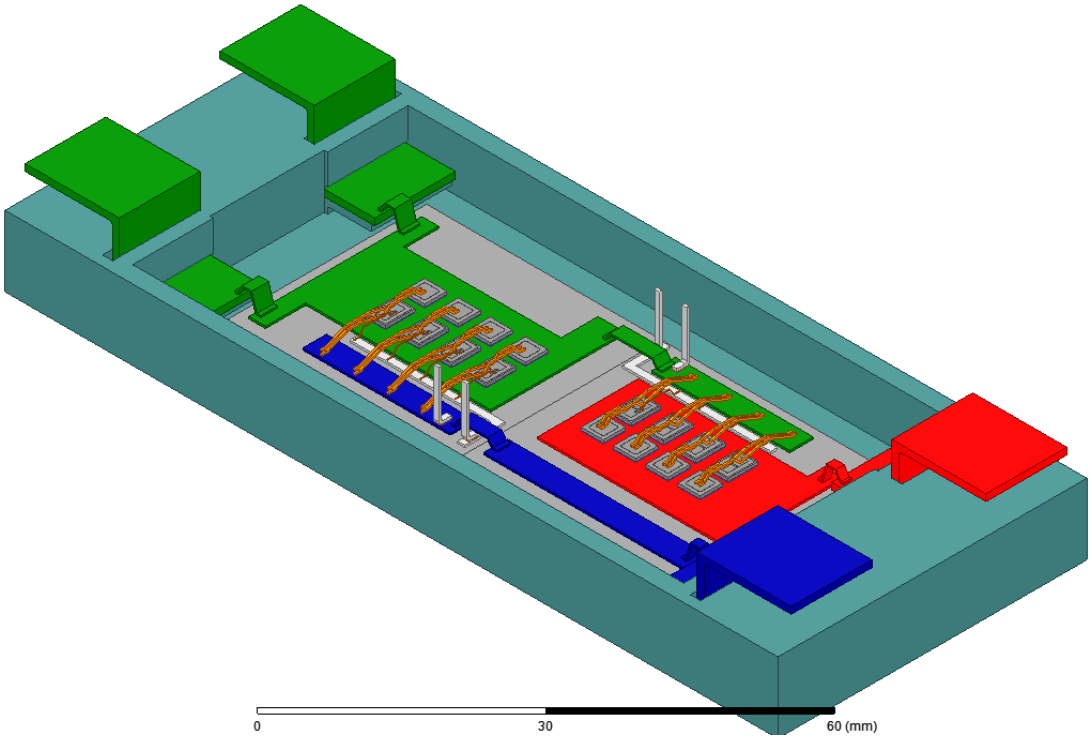

Impact of Parasitics on the Performance of Inverters

- Half-bridge module: Electrical Nets and Terminals

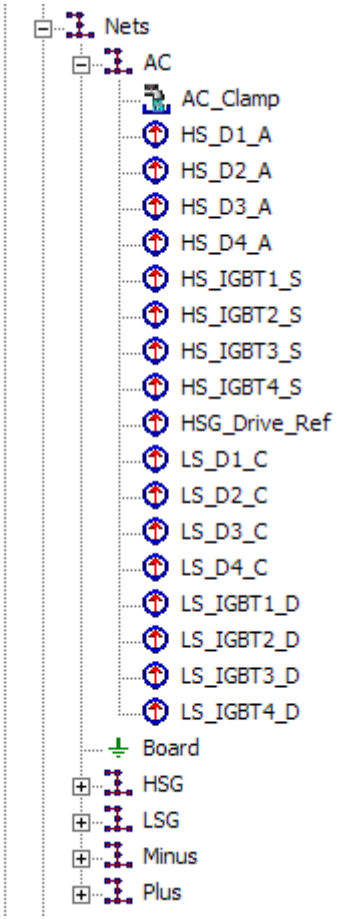

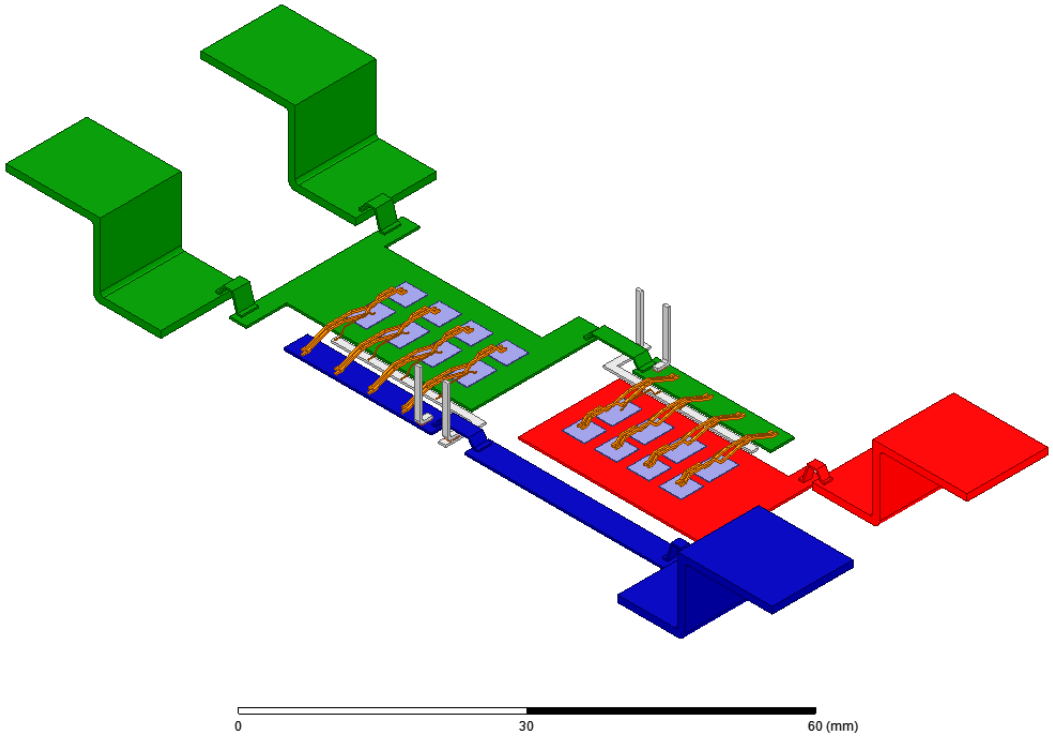

Current Distributions

- DC currents

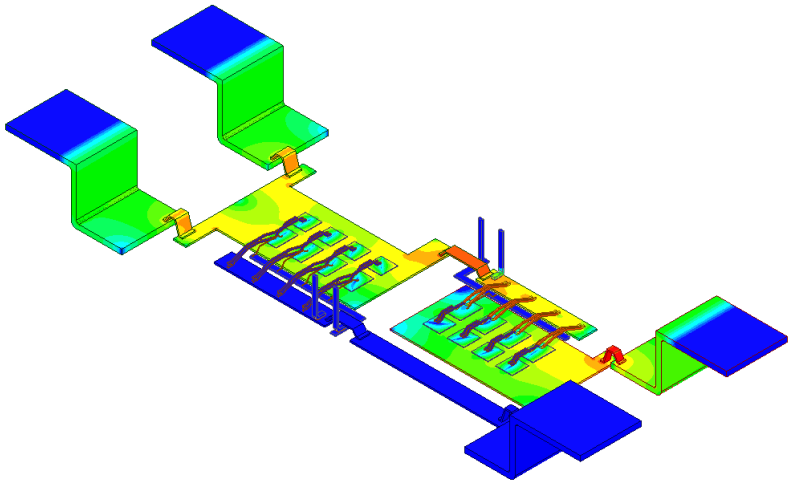

- AC currents – proximity effect!

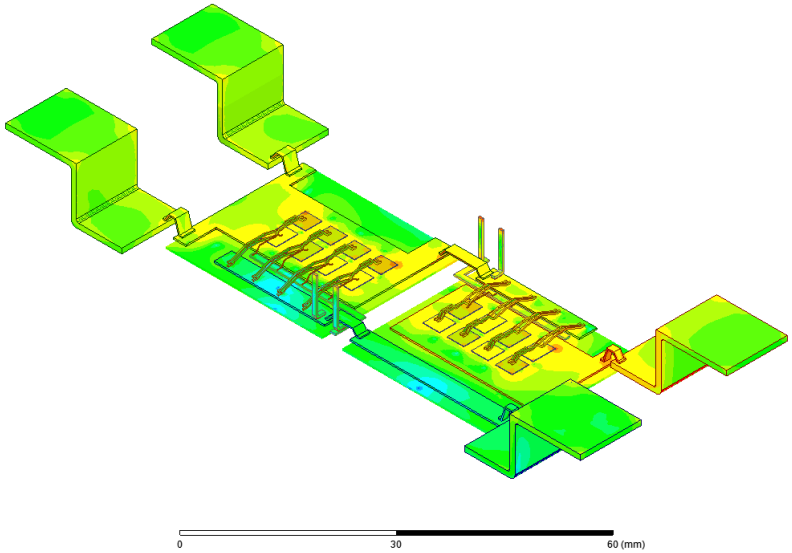

High Side Test

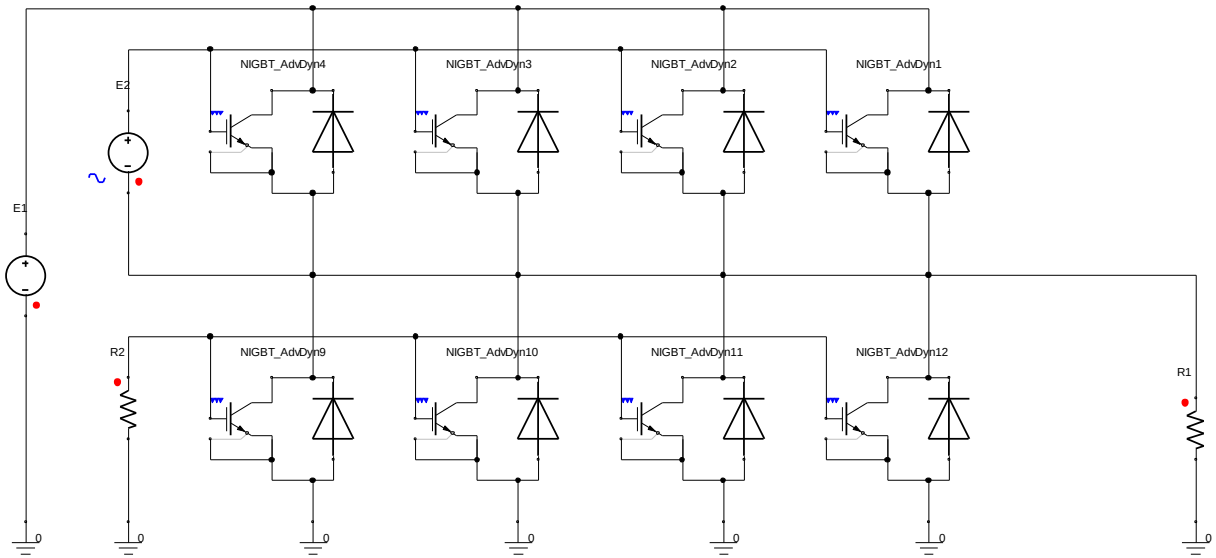

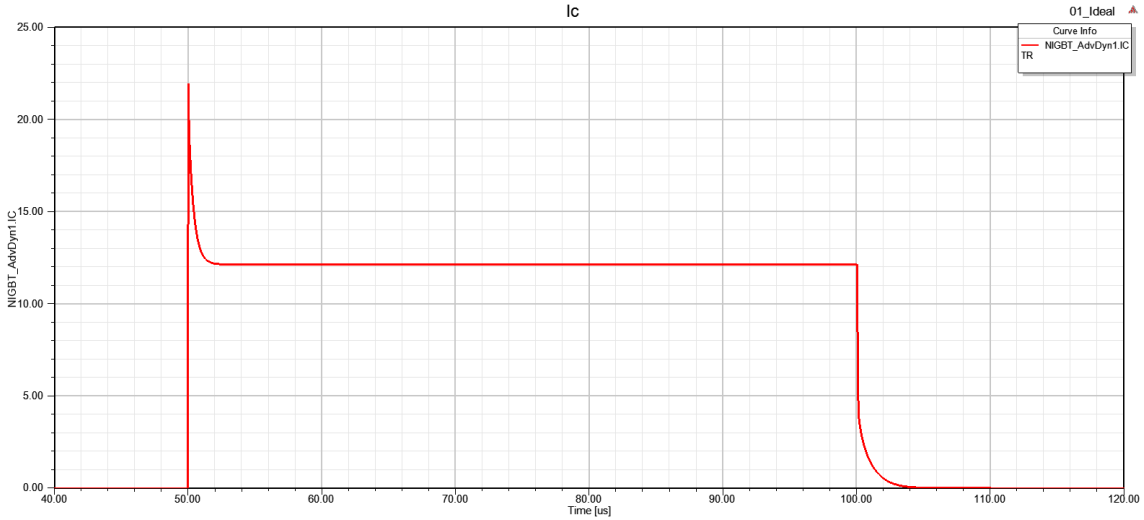

High Side Test

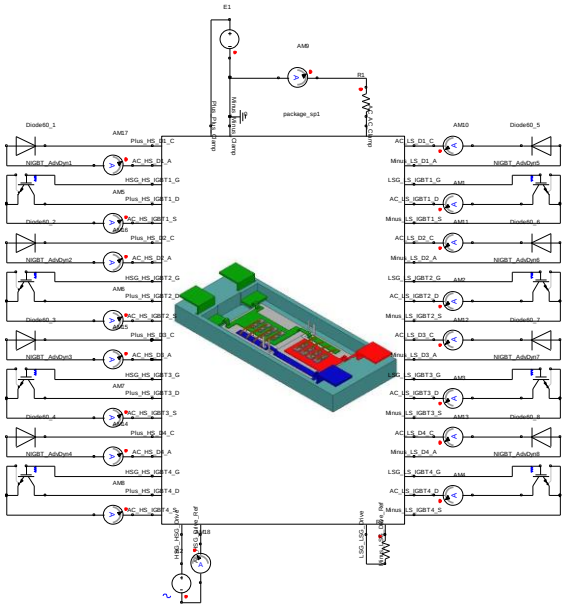

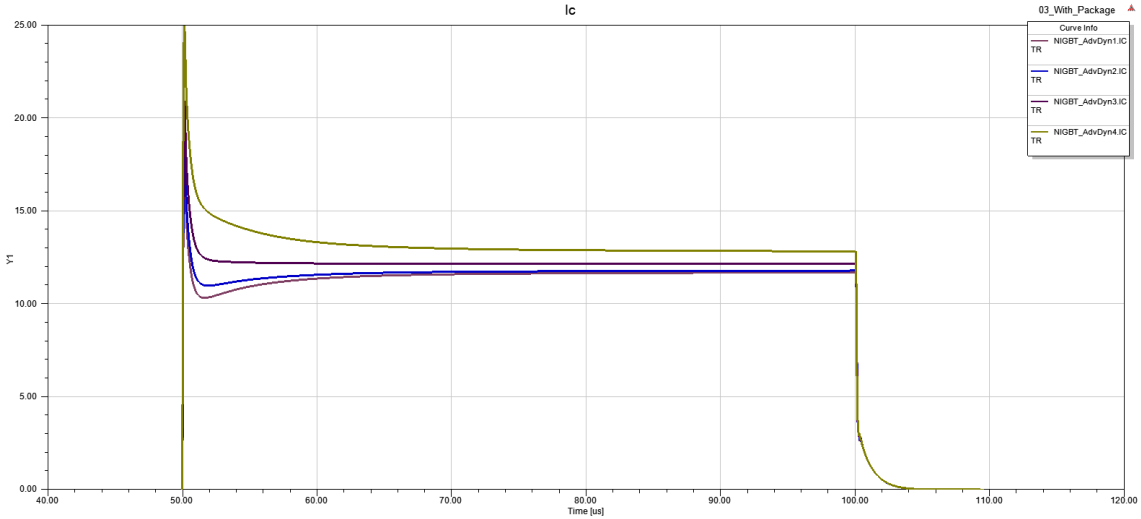

Transient Simulation of Signales

- Switching edges
- Short circuit
- Conducted emissions

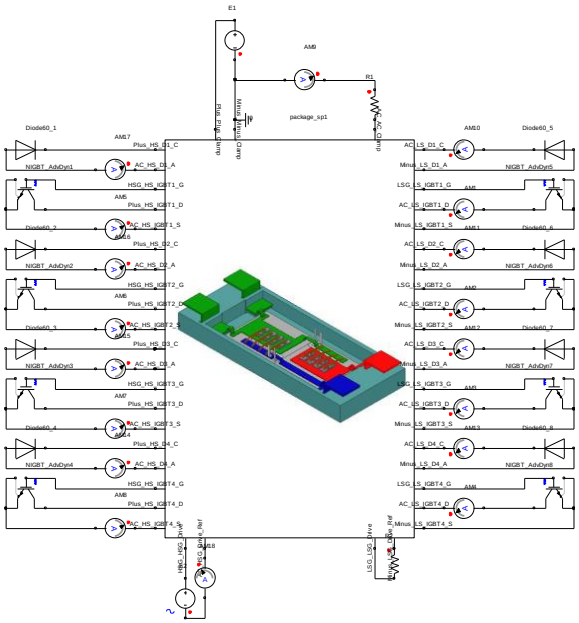

Dominated by
AC inductance

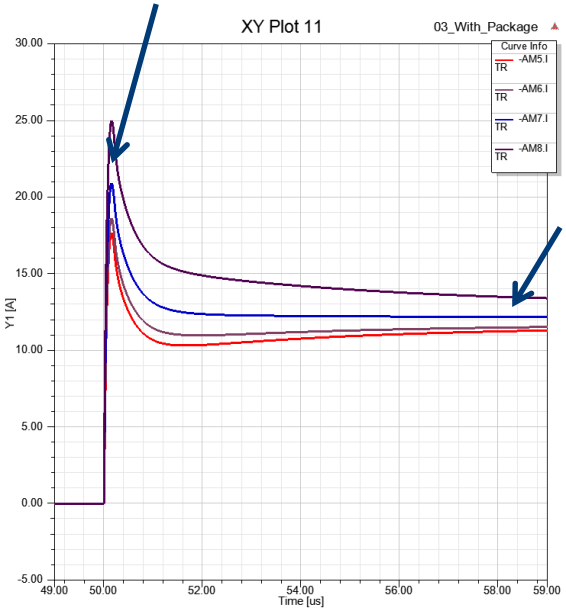

Dominated by
DC resistance

Currents through HS IGBTs

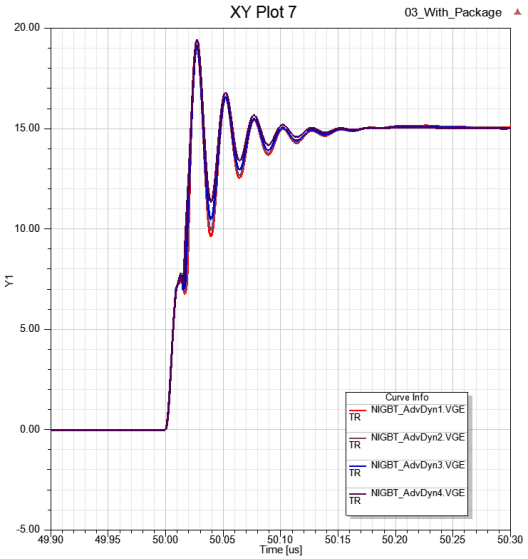

Gate voltages at HS IGBTs

Fast Variation for ‘Proof of Concept’

- Quickly find and optimize design
  - Connection to parametric geometries
  - Easy modification of geometries using ANSYS SpaceClaim direct modeler

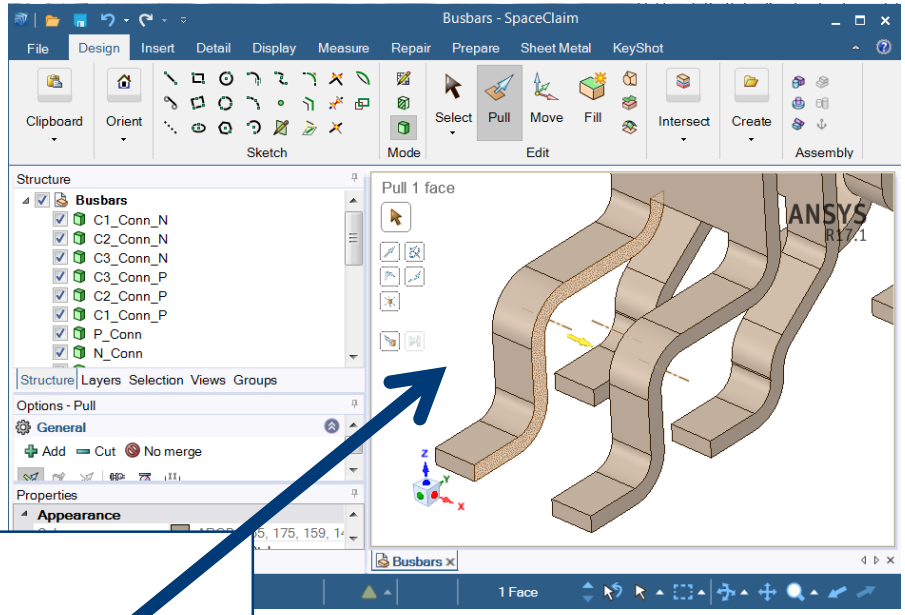

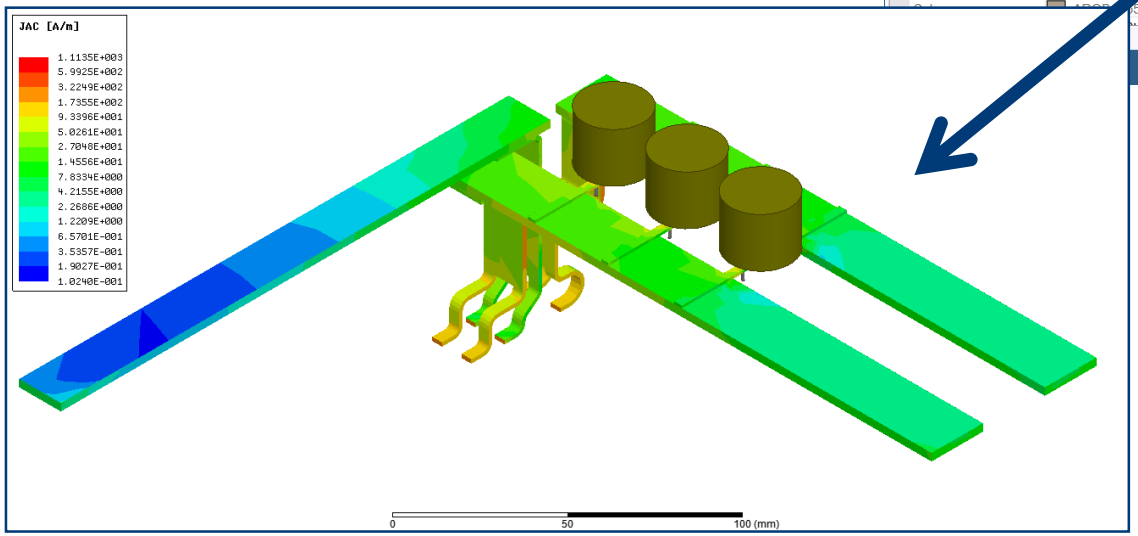

CADFEM®

Simulation is more than Software®

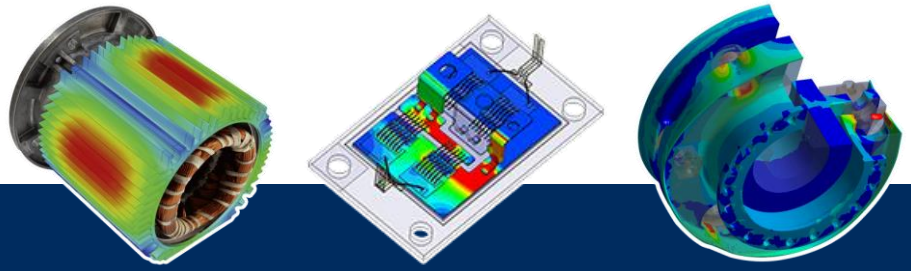

Conducted Emissions of a DC-DC Converter

Modeling for EMI Simulation

- Lower part of emissions spectrum well described by ideal circuit

- Need to take parasitics into account in order to describe the higher harmonics!
  - Spikes, overshooting
  - Parasitic oscillations

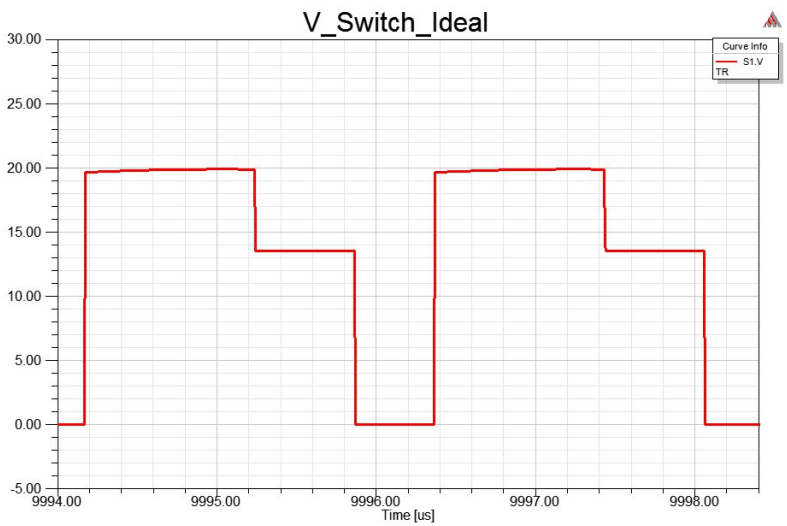

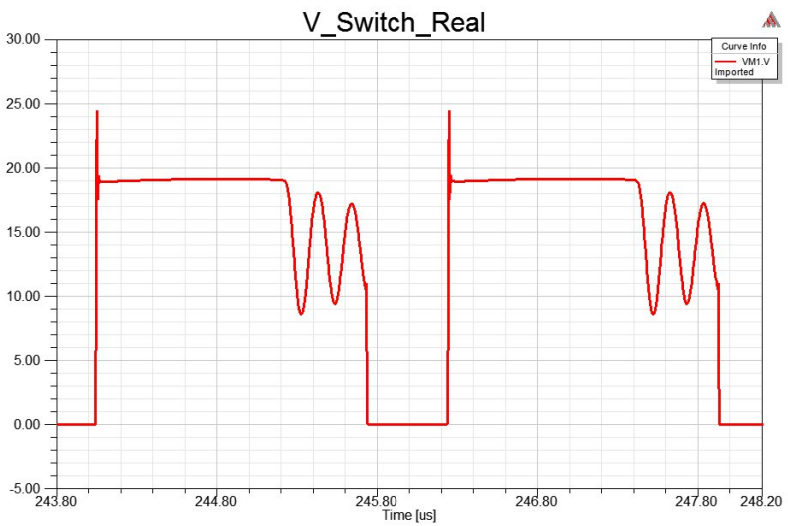

Quantifying Emissions according to CISPR 25 Standard

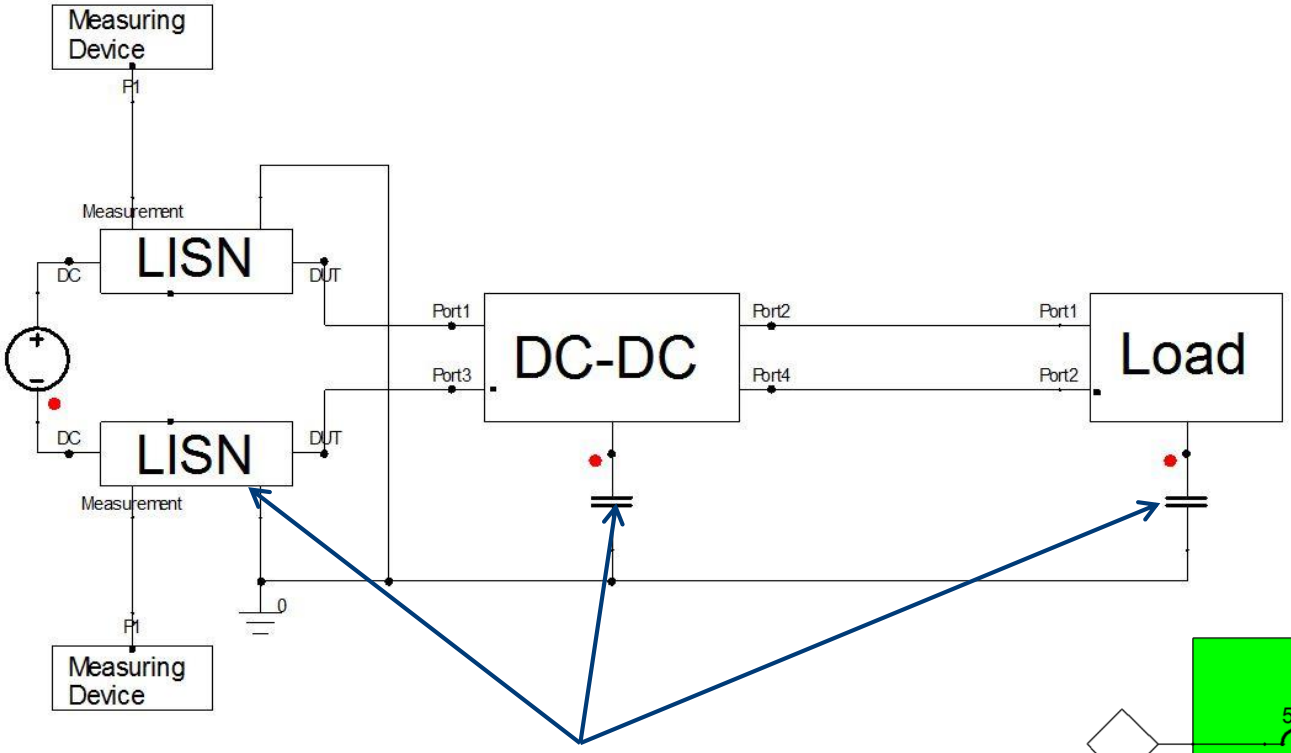

GND LISN is important:
capacitive coupling to
true GND
→ Common mode

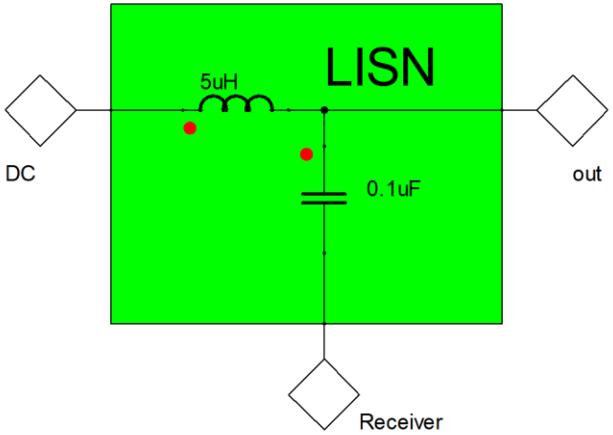

Tools and Workflows – ECAD/Layout

- Layout Import and Setup of Terminals in SIwave
- RLCG Extraction in Q3D

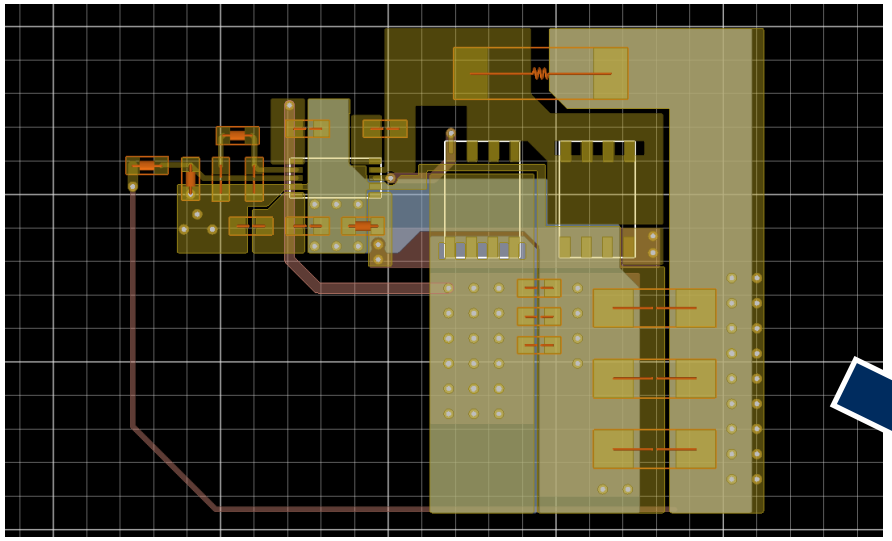

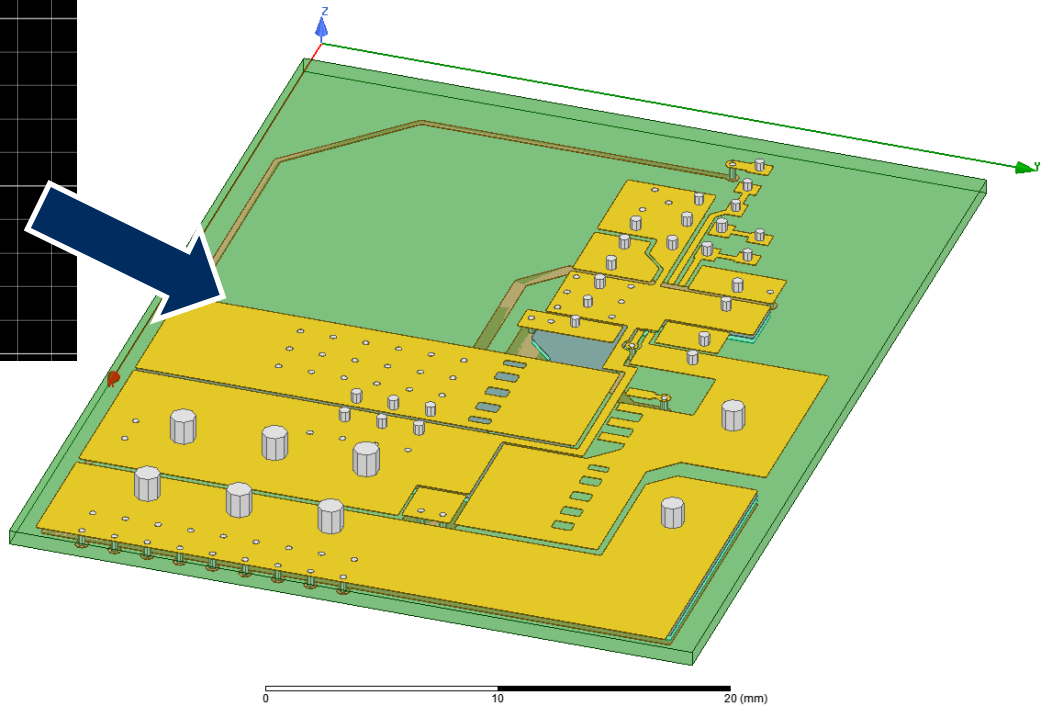

Modeling for EMI Simulation

- Parasitic RLC of PCB and harness from field simulation
- Parasitics of passive components from measurement
- Dynamic behavioral models of active components

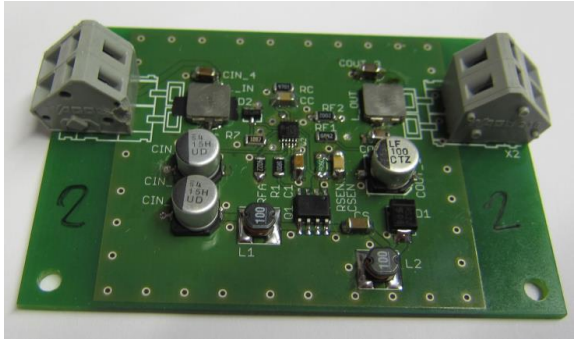

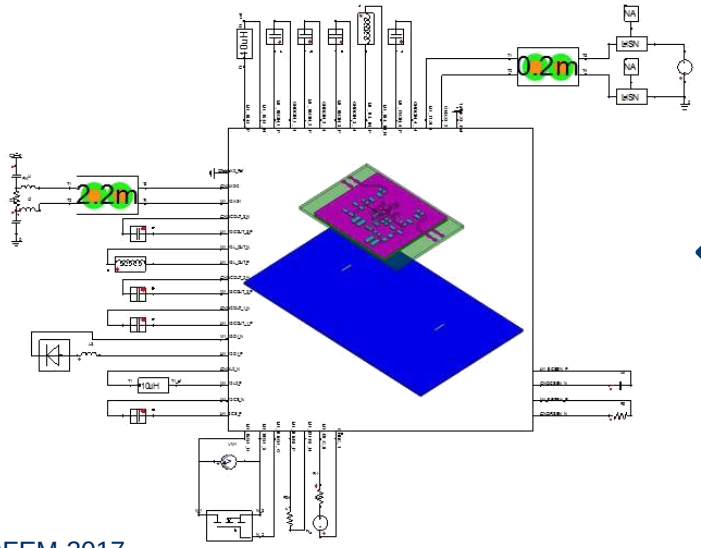

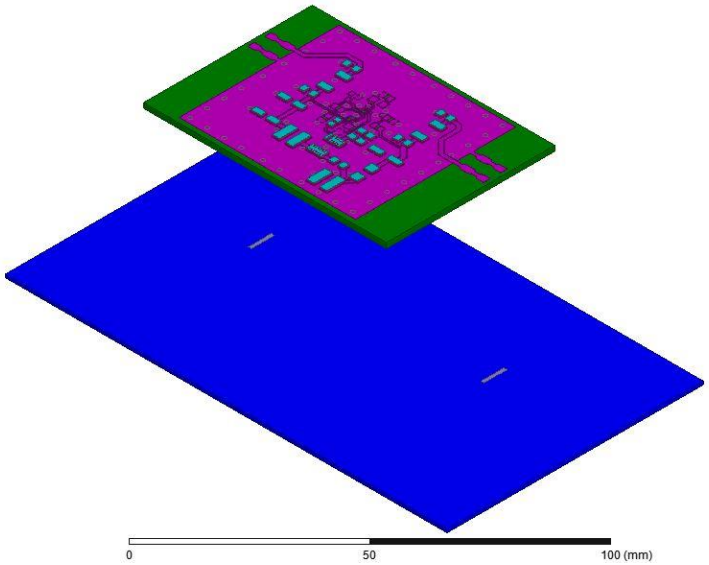

Simulation of Conducted Emissions of a DC-DC Converter

- Goal:
  - Understand coupling mechanisms of interferences
  - Find efficient countermeasures
  - Evaluate different countermeasures

- Good agreement with measurement

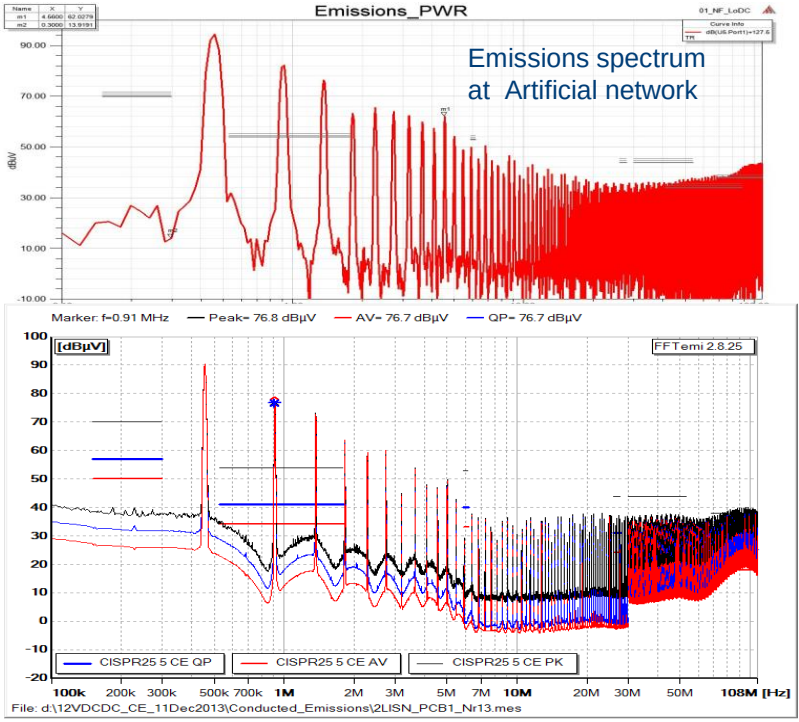

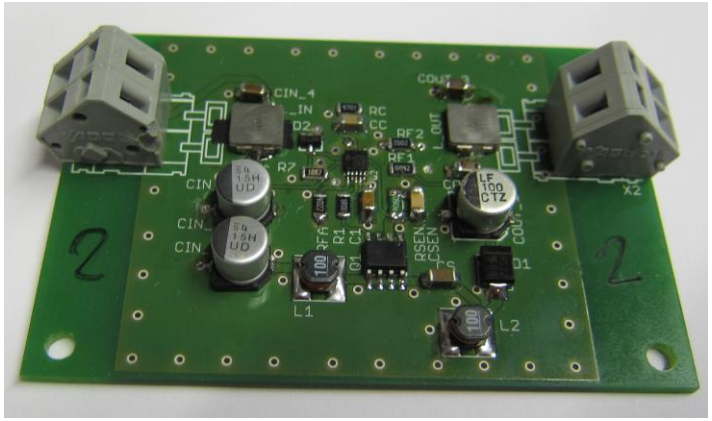

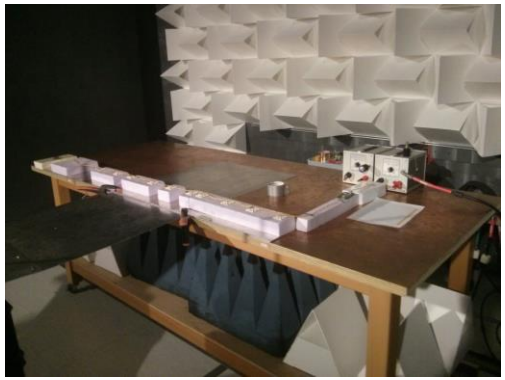

Continental
The Future in Motion

Key Technology – ANSYS Q3D Extractor

- Fast, accurate 3-D parasitic extraction
  - Capacitance, conductance
  - DC RL
  - AC RL
- Results include proximity and skin effect, dielectric and Ohmic loss, and frequency dependencies
- Automatic adaptive meshing
- Equivalent circuit model creation
  - Simplorer State space model
  - PSpice, HSPICE, Spectre, IBIS ICM/PKG

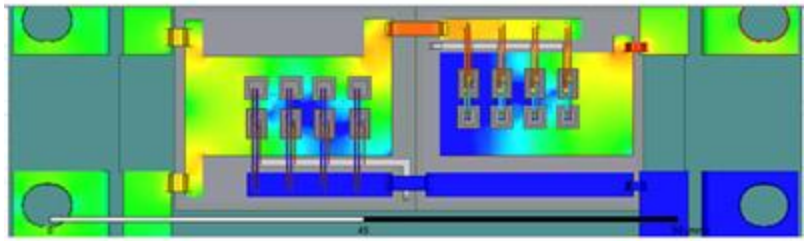

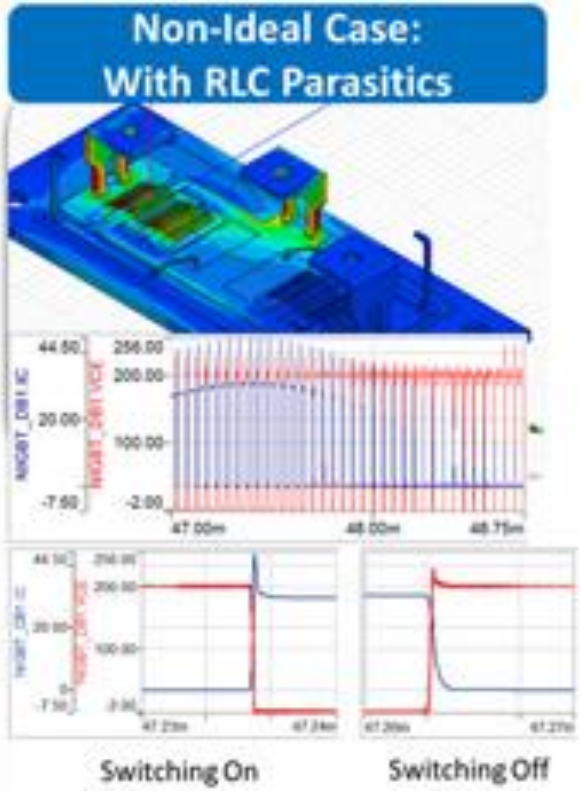

CADFEM – Simulation is more than Software

PRODUCTS
Software und IT Solutions

SERVICES
Advice, Support, Engineering

KNOW-HOW
Transfer of knowledge

CADFEM in D, A, CH
- 1985 founded
- 2,300 customers
- 11 locations
- 220 employees (worldwide > 350)
- ANSYS Elite Channel Partner